Centrifugal pumps

KNOLL
.It works

Issue 09-2023

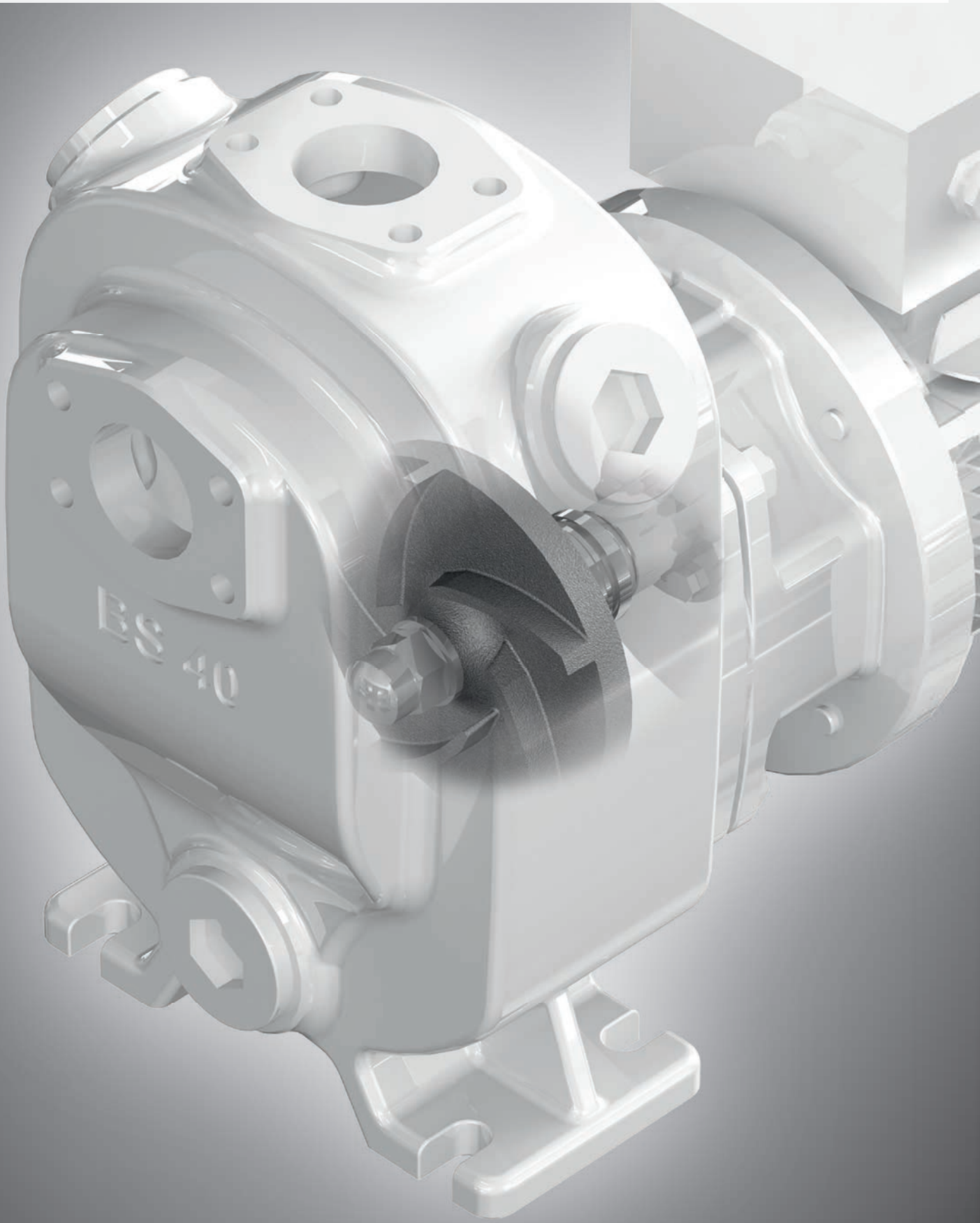

Contents

Design and applications of KNOLL centrifugal pumps 4

Type key and standard multi-range motors 5

Frequency inverter (FI) 6

Block pumps 8

- BS 32 self-priming pump 10
- BS 40 self-priming pump 12
- BS 50 self-priming pump 14

Clean medium pumps 16

- TG 25 clean medium pump 18
- TG 30 clean medium pump 20
- TG 40 clean medium pump 22
- TG 50 clean medium pump 24

Contaminated medium pumps 26

- TF contaminated medium pump 40 28
- TF contaminated medium pump 50 30
- TS contaminated medium pump 40 32
- TSK contaminated medium pump 40 34
- TSK contaminated medium pump 50 36
- TSK contaminated medium pump 65 38
- TSL contaminated medium pump 40 40

Shredder pumps 42

- TSC 50 shredder pump 44
- TSC 65 shredder pump 46

KNOLL centrifugal pumps are available as submerged or block pumps. These turbomachines are primarily used on machine tools for conveying cooling lubricants.

Operating as recirculation pumps, they transport the mixture of chips and cooling lubricant to the filter/separator. They then supply the machines with the cleaned cooling lubricant again. Thanks to their solid and robust design, KNOLL cooling lubricant pumps are extremely reliable and have a long service life.

There are six different designs:

TG with closed impeller for cleaned cooling lubricant with residual contamination
TF with free-flow impeller for contaminated cooling lubricant containing short chips
TS with screw impeller for contaminated cooling lubricant containing air
TSK/TSL with semi-open radial impeller for contaminated cooling lubricant containing short chips
TSC with semi-open radial impeller and cutter for contaminated cooling lubricant with long aluminium chips
BS with semi-open radial impeller for contaminated cooling lubricant with high air content

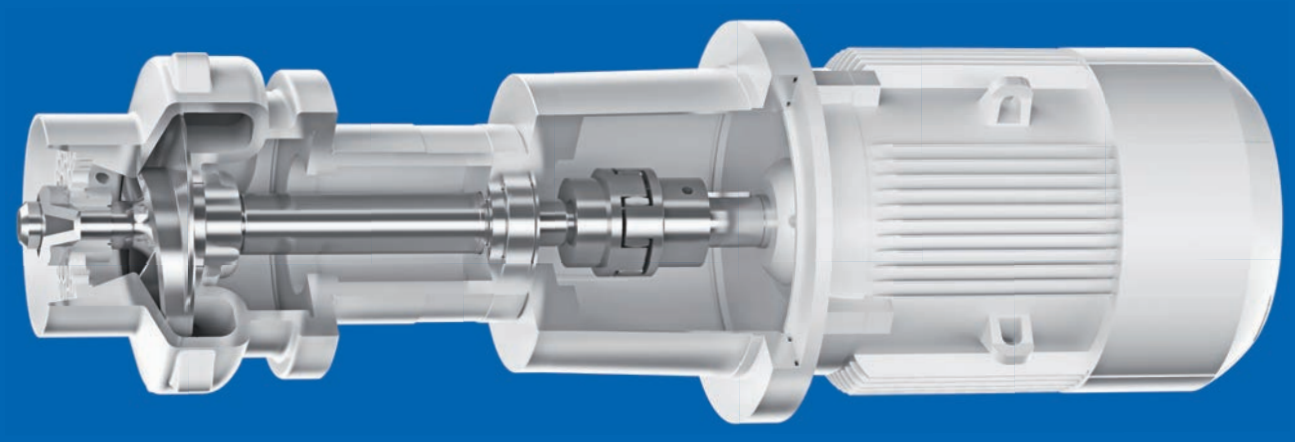

Type key

TSC 65–63/75 360

Pump type
Overall size
Impeller index
Motor output x 10
Depth of immersion in mm

Application example: TSC 65–63/75 360

TSC	Pump type	
65	Overall size	
63	Impeller index	dia. 163 mm
75	Motor output	7.5 kW
360	Depth of immersion	360 mm

Drives

Standard multi-range motors, 2-pole, thermal class ISO-F, IP54 rating, IE3

0.37 kW to 5.5 kW	7.5 kW
230 V (Δ)/400 V (Y), 50 Hz, 2900 rpm	400 V (Δ)/690 V (Y), 50 Hz, 2900 rpm
265 V (Δ)/460 V (Y), 60 Hz, 3500 rpm	460 V (Δ), 60 Hz, 3500 rpm

Other voltages available on request.

Technical data of the standard IEC/EN 60034

In order to keep the load on the pump and motor as low as possible, the maximum switching frequency should not be exceeded.

Rated output	Maximum switching frequency
0.1 kW to 2.6 kW	60x/hour
3.0 kW to 5.5 kW	40x/hour
7.5 kW to 10.0 kW	20x/hour
›10.0 kW	15x/hour

Note: The characteristic curves shown below are based on frequencies of 50/60 Hz and cooling lubricant emulsion. Characteristic curves for other media, speeds and viscosities are available on request. The recommended range is marked with dashed lines.

Frequency inverter (FI) 0.75 – 7.5 kW

Benefits

- Compact design thanks to installation of the FI on the terminal box of the motor (piggyback).
- Control system incorporates KNOLL control expertise.

Recommended motor output [kW]	0.75	1.1	1.5	2.2	3.0	4.0	5.5	7.5
Mains current [A]	1.9	2.6	3.3	4.6	6.2	7.9	10.8	14.8
Rated output current [A] with 400 V/8 kHz	2.3	3.1	4.0	5.6	7.5	9.5	13.0	17.8
Size	A			B			C	
Weight incl. worktop [kg]	3.9			5.0			8.7	
Protection rating	IP 65							
Max. overload for 60 sec [%]	150							
Mains voltage	3 AC 400 V -15% to 480 V +10%							
Mains frequency	50/60 Hz ±6%							
EMC approval	Complies with DIN EN 61800-3, Class C2							
Certificate and conformity	CE and UL							
Temperature range	-25 °C (without condensation) to +50 °C (without derating)							
Protective functions	Over/undervoltage, I^2t limiting, short circuit, motor temperature, inverter temperature, tilt protection, locked rotor protection							
Output frequency range	0 – 400 Hz							
Digital inputs	4							
Fixed frequency	7							
Digital outputs	2							
Analog inputs	2 analogue inputs (0/2 - 10 V, 0/4 - 20 mA)							
Analog outputs	0 - 10 V (-Imax = 10 mA) or 0 - 20 mA (-load R = 500 Ω)							
Process control	Freely configurable PID controller							
Relay outputs	2 make contacts, 250 V AC 2 A							
USB interface	USB on M12 connector (RS485/RS232 converter)							
Handheld terminal (optional)	MMI with lead							
Bus modules (optional)	Profibus DP, CANopen, EtherCAT							
Secure grip	Optional							

Dimensions

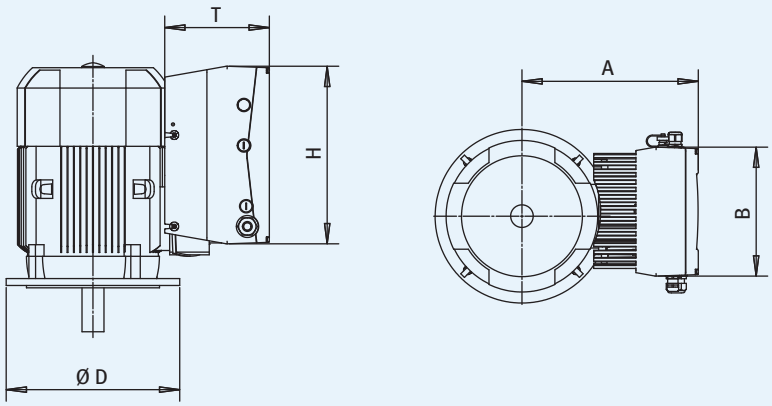

Motor output [kW]	Overall size	Key dimensions [mm]				
		A	B	D	H	T
0.75 - 1.5	A	205	153	200	233	120
2.2	B	230	189	200	270	140
3.0	B	235	189	250	270	140
4.0	B	245	189	250	270	140
5.5 - 7.5	C	310	223	300	307	181

Example design:
TSC shredder pump with frequency inverter

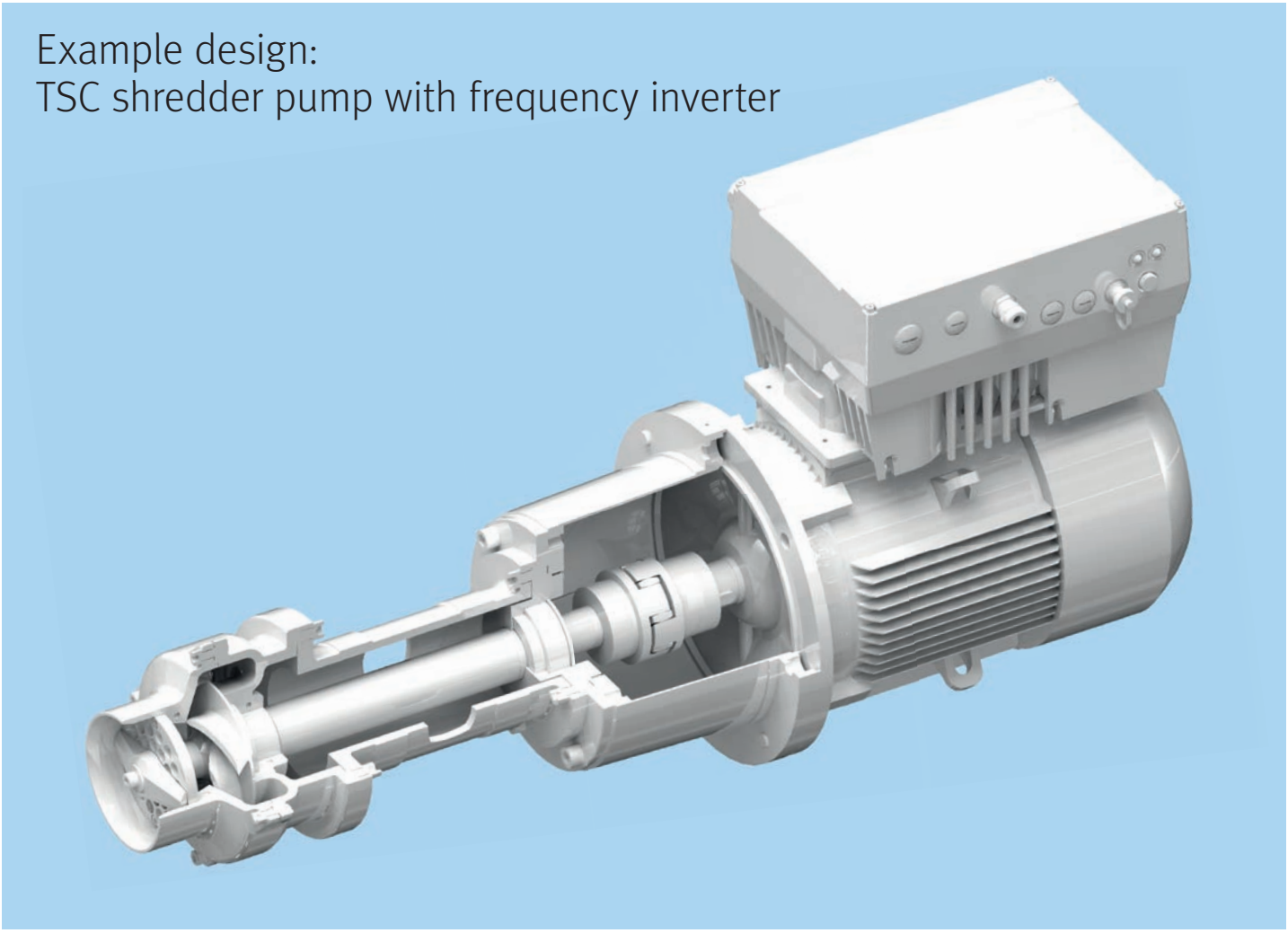

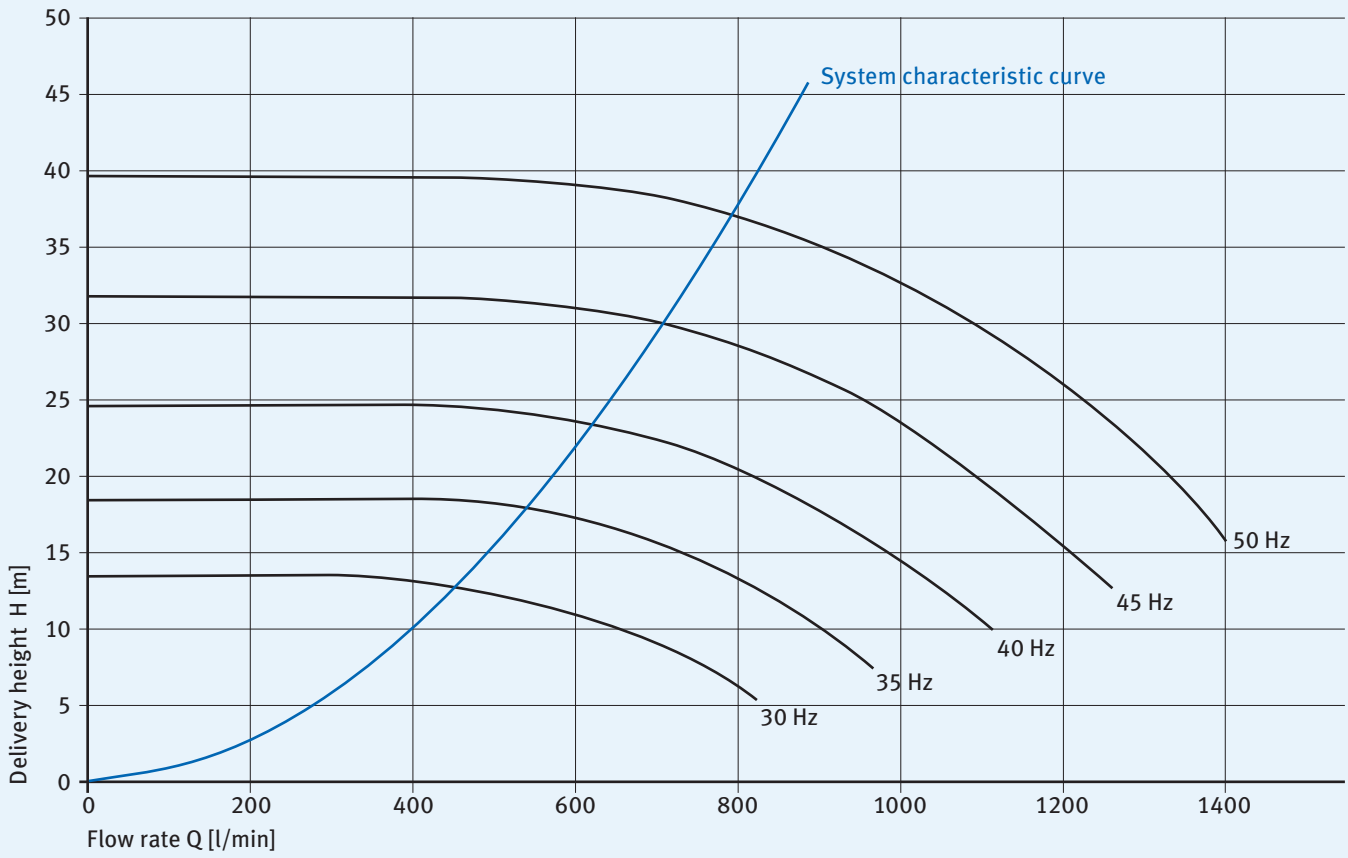

Block pumps

The self-priming KNOLL BS series block pumps convey contaminated cooling lubricants with a high air content. Thanks to their solid and robust design, KNOLL block pumps are extremely reliable and have a long service life.

Properties

- Dry mounted
- Self-priming
- Flexible design with standard-dimensioned motor
- Energy efficient in combination with a frequency inverter
- Flow-optimised casing with impeller
- High-quality and wear-resistant mechanical seal
- Quick suction time
- Variable connection option for pressure-side pipework

Maximum performance data

Type	Volume flow [l/min]	Delivery height [m]	Grain size [mm]
BS 32	260	14	8
BS 40	380	24	10
BS 50	550	28	10

Connections

Type	Pressure connection	Suction connection	Filling port
BS 32	SAE 1-1/4"	SAE 1-1/4"	G 1-1/4"
BS 40	SAE 1-1/2"	SAE 1-1/2"	G 1-1/2"
BS 50	SAE 2"	SAE 2"	G 2"

Characteristic curve diagram

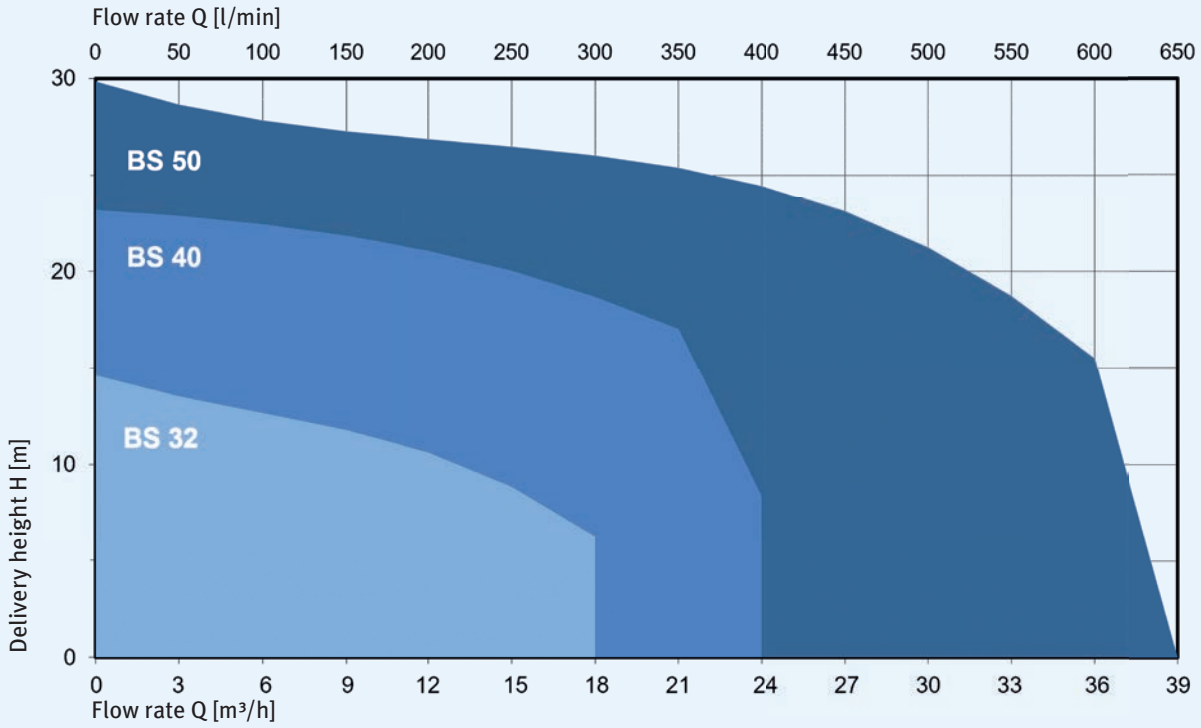

BS 32
self-priming pump

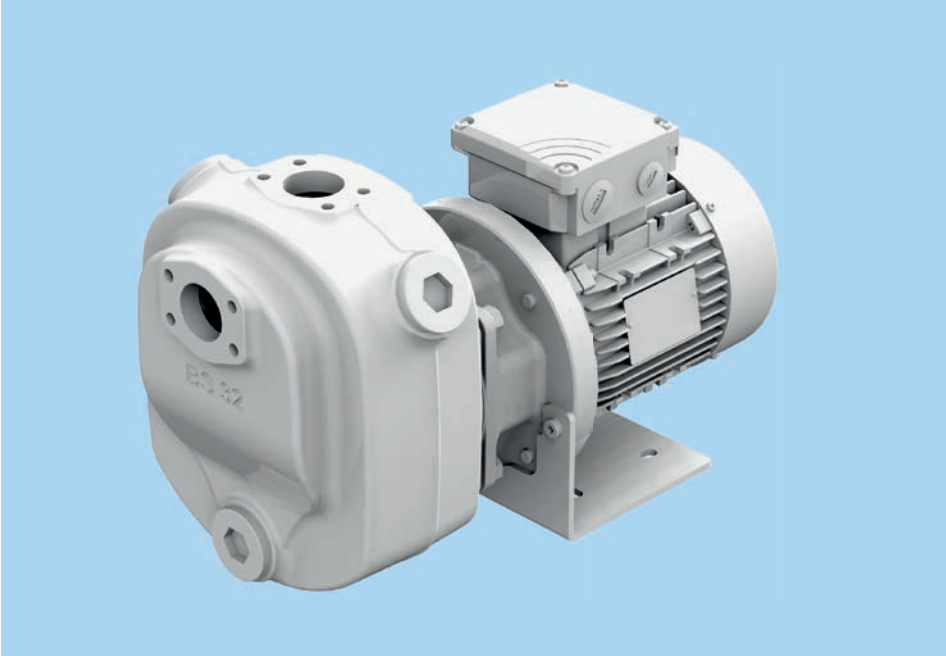

Variations

Type	Motor output [kW]	Frequency [Hz]	Weight [kg]
BS 32-11/11	1.1	50	39
BS 32-95/11	1.1	50	39
BS 32-85/11	1.1	50	39
BS 32-95/15	1.5	60	42
BS 32-85/15	1.5	60	42

Dimensions

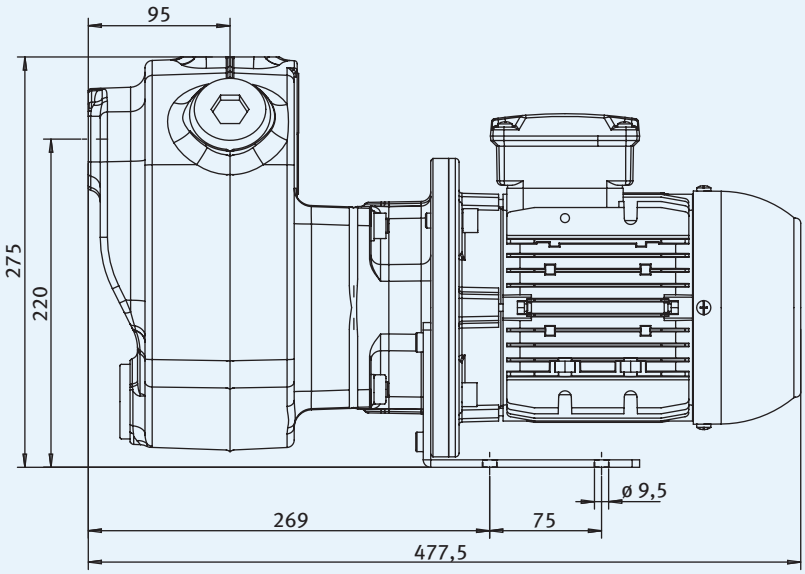

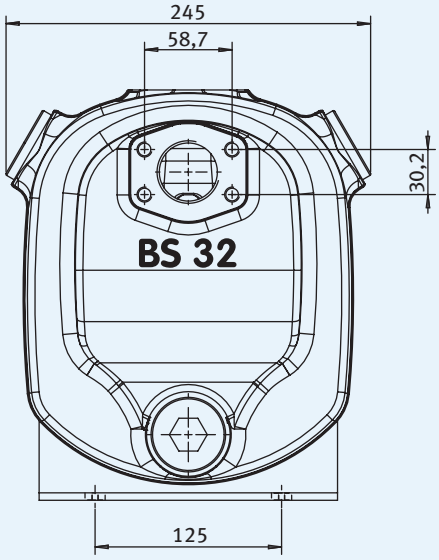

Characteristic curves for 2900 rpm, 50 Hz, 1 mm²/s

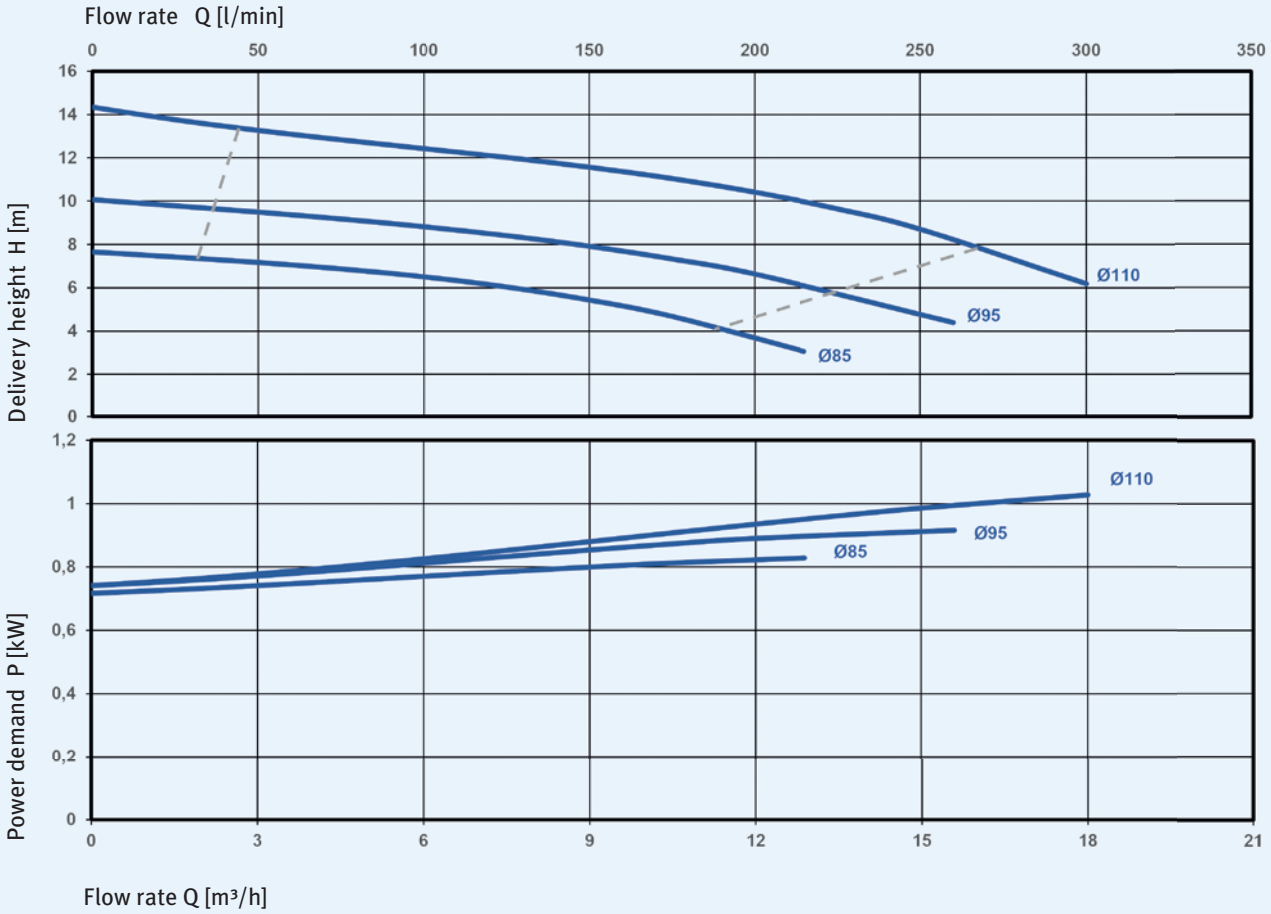

Characteristic curves for 3500 rpm, 60 Hz, 1 mm²/s

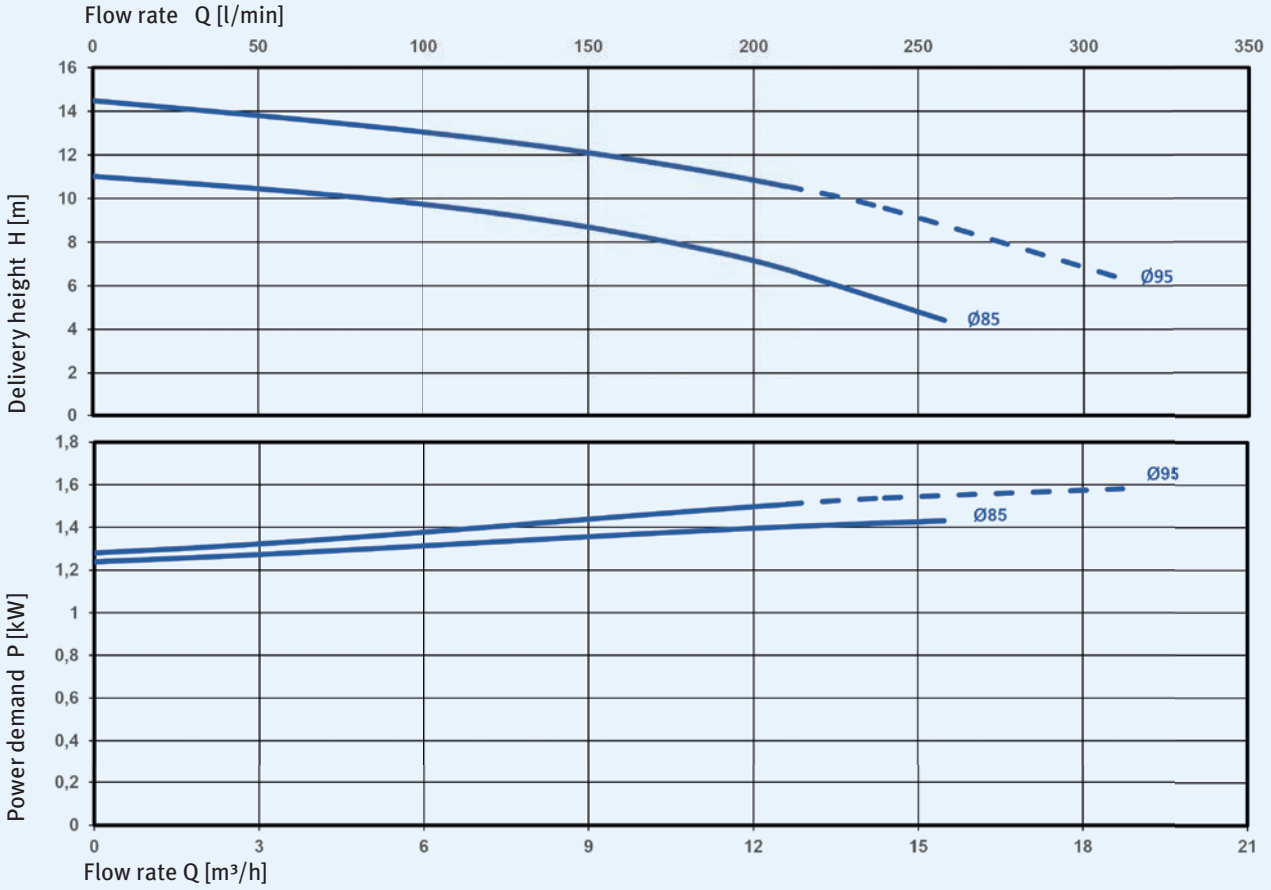

BS 40
self-priming pump

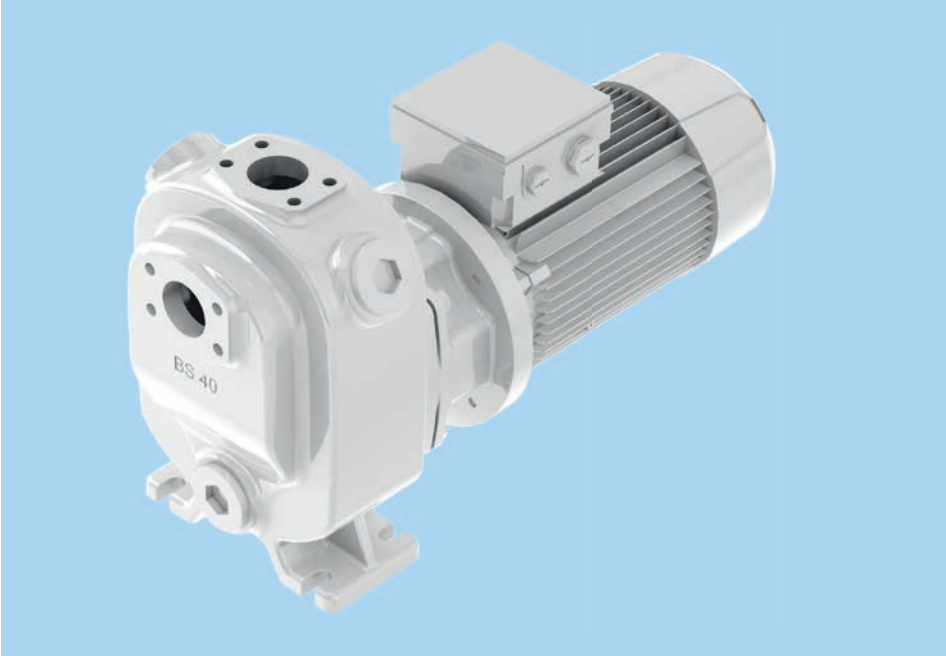

Variations

Type	Motor output [kW]	Frequency [Hz]	Weight [kg]
BS 40-30/22	2.2	50	50
BS 40-10/22	2.2	50/60	50
BS 40-95/22	2.2	50/60	50

Dimensions

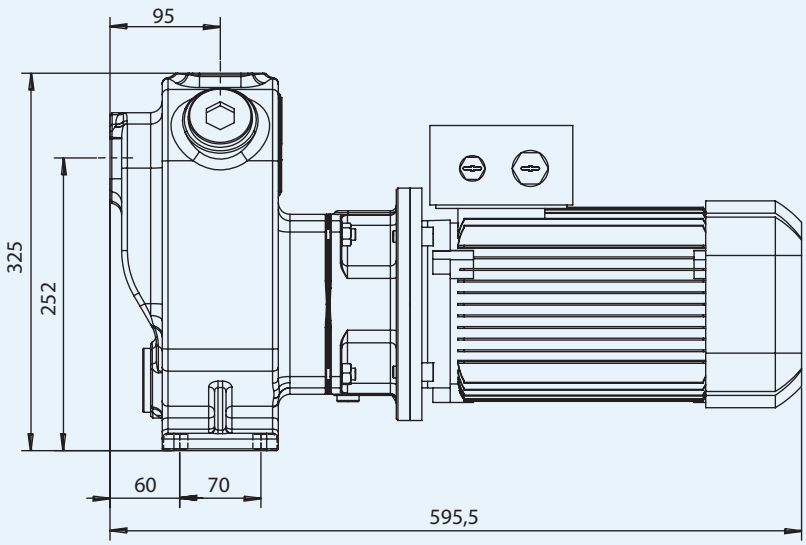

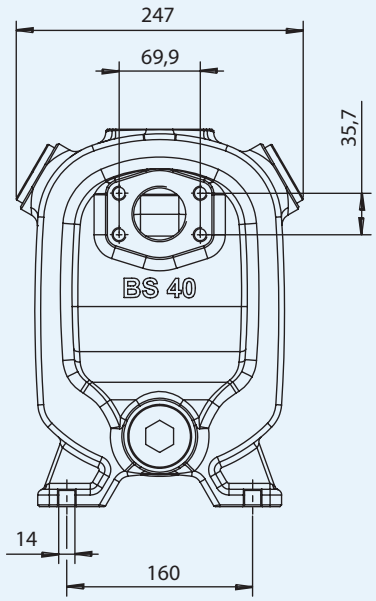

Characteristic curves for 2900 rpm, 50 Hz, 1 mm²/s

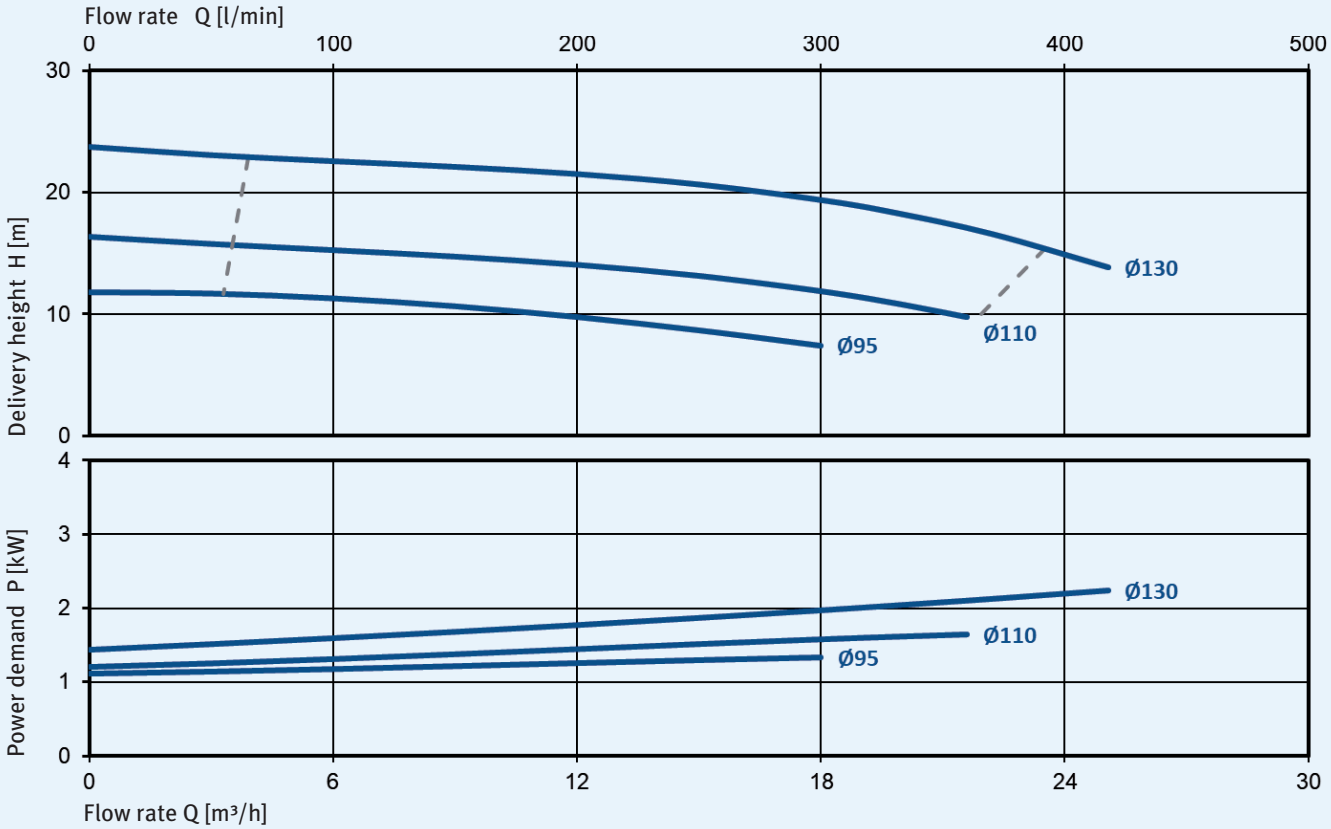

Characteristic curves for 3500 rpm, 60 Hz, 1 mm²/s

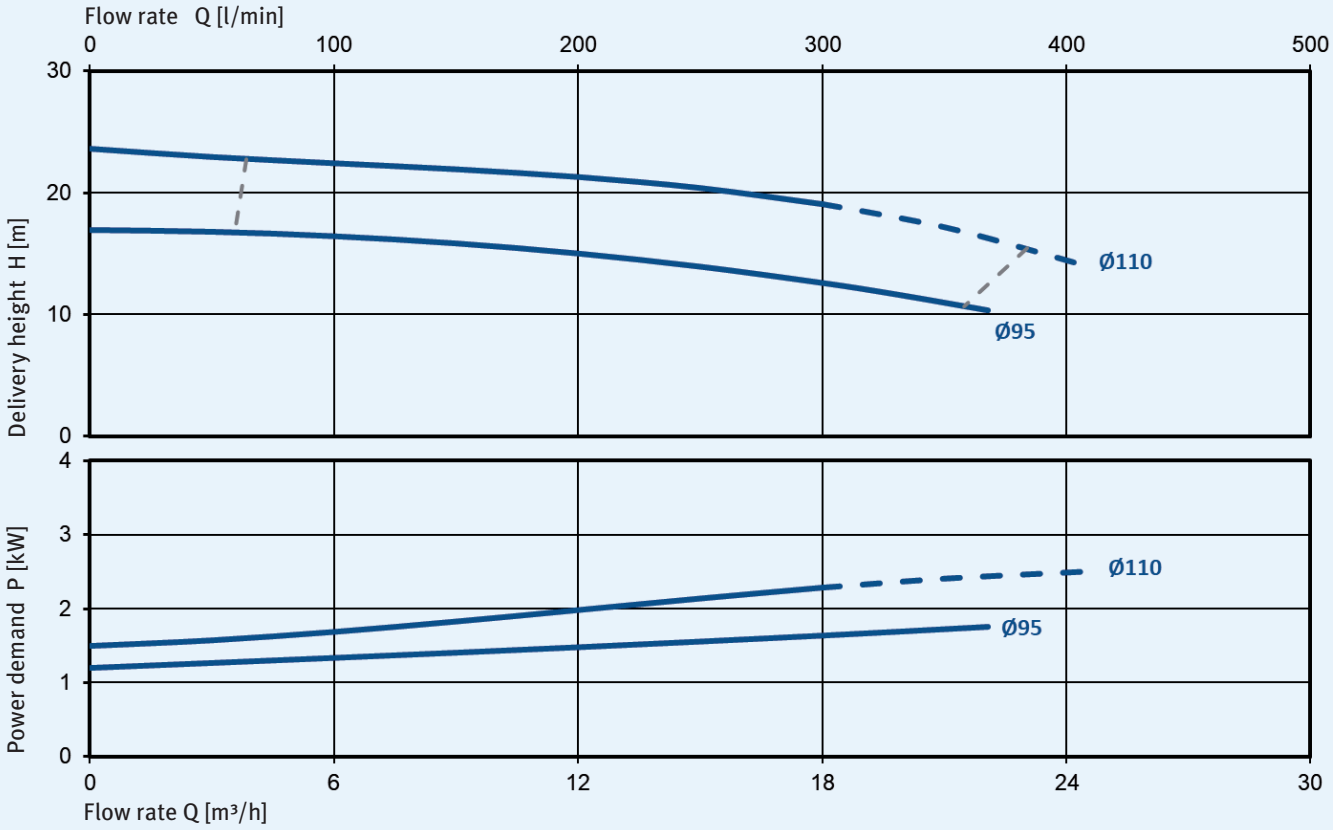

BS 50
self-priming pump

Variations

Type	Motor output [kW]	Frequency [Hz]	Weight [kg]
BS 50-45/40	4.0	50	76
BS 50-35/40	4.0	50	76
BS 50-25/30	3.0	50	66
BS 50-25/40	3.7	60	76
BS 50-15/40	3.7	60	76

Dimensions

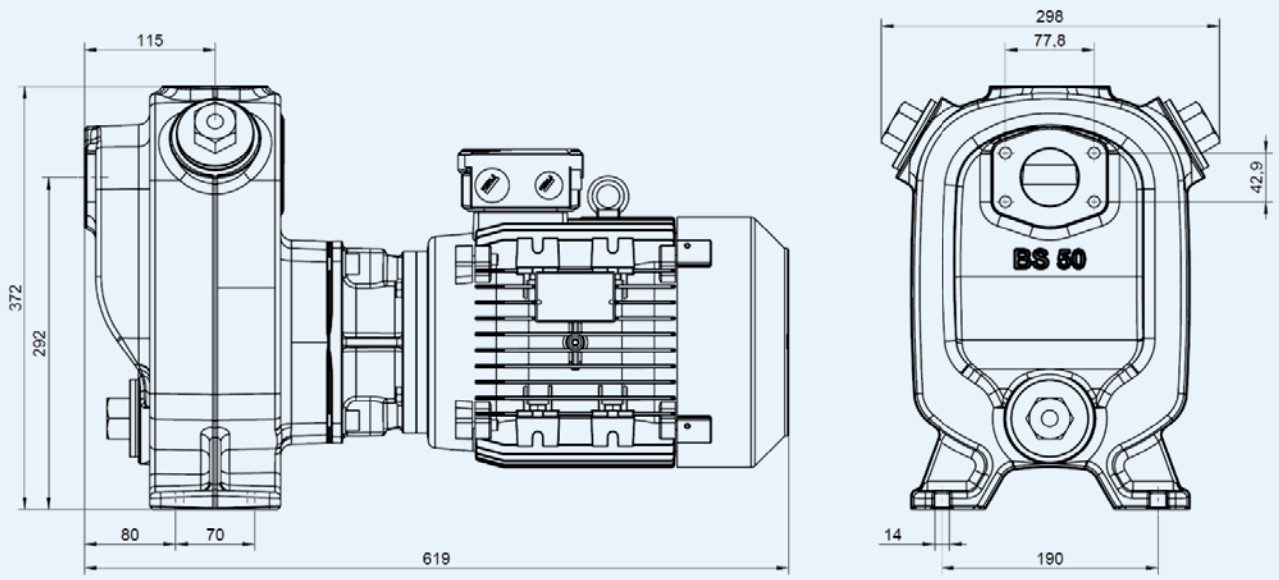

Characteristic curves for 2900 rpm, 50 Hz, 1 mm²/s

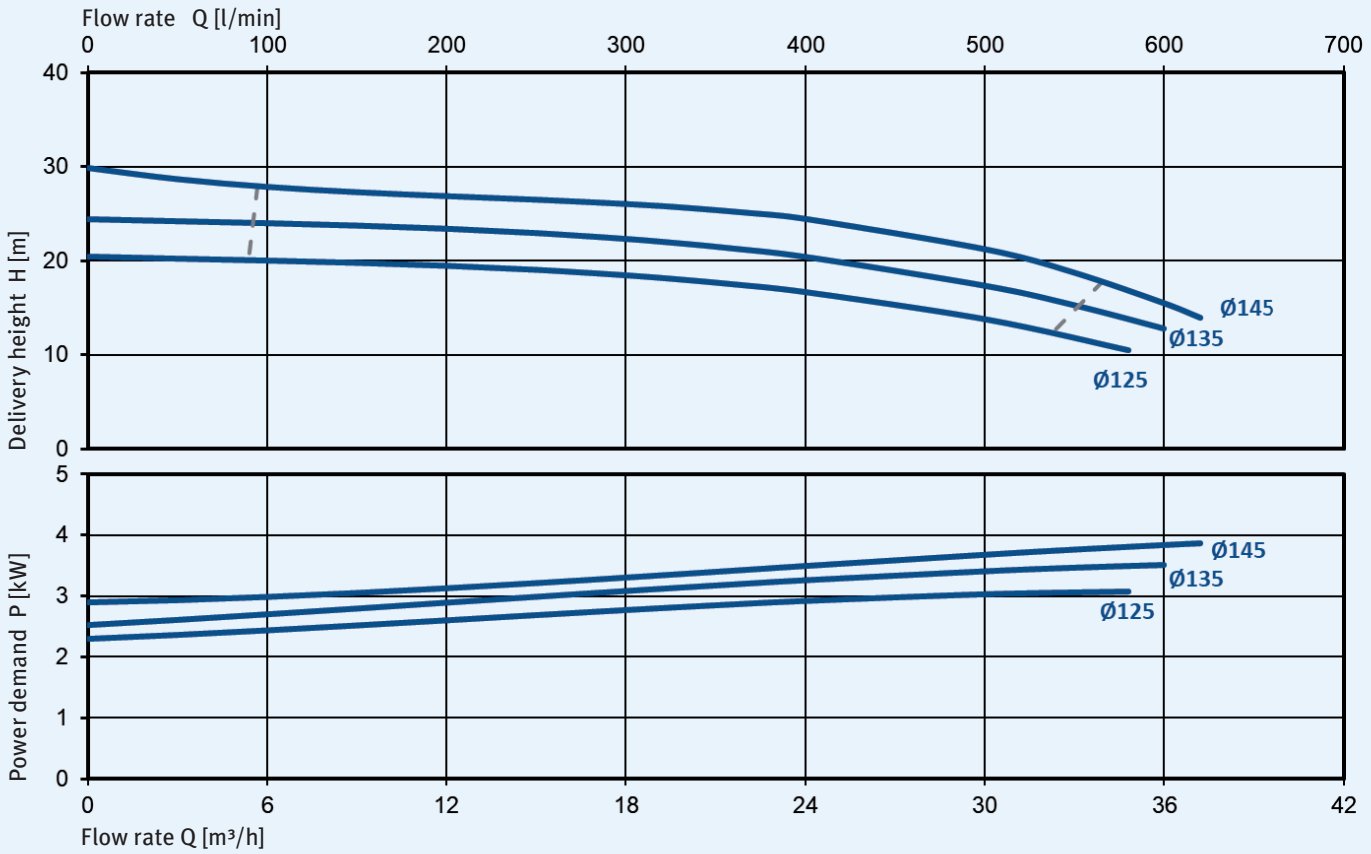

Characteristic curves for 3500 rpm, 60 Hz, 1 mm²/s

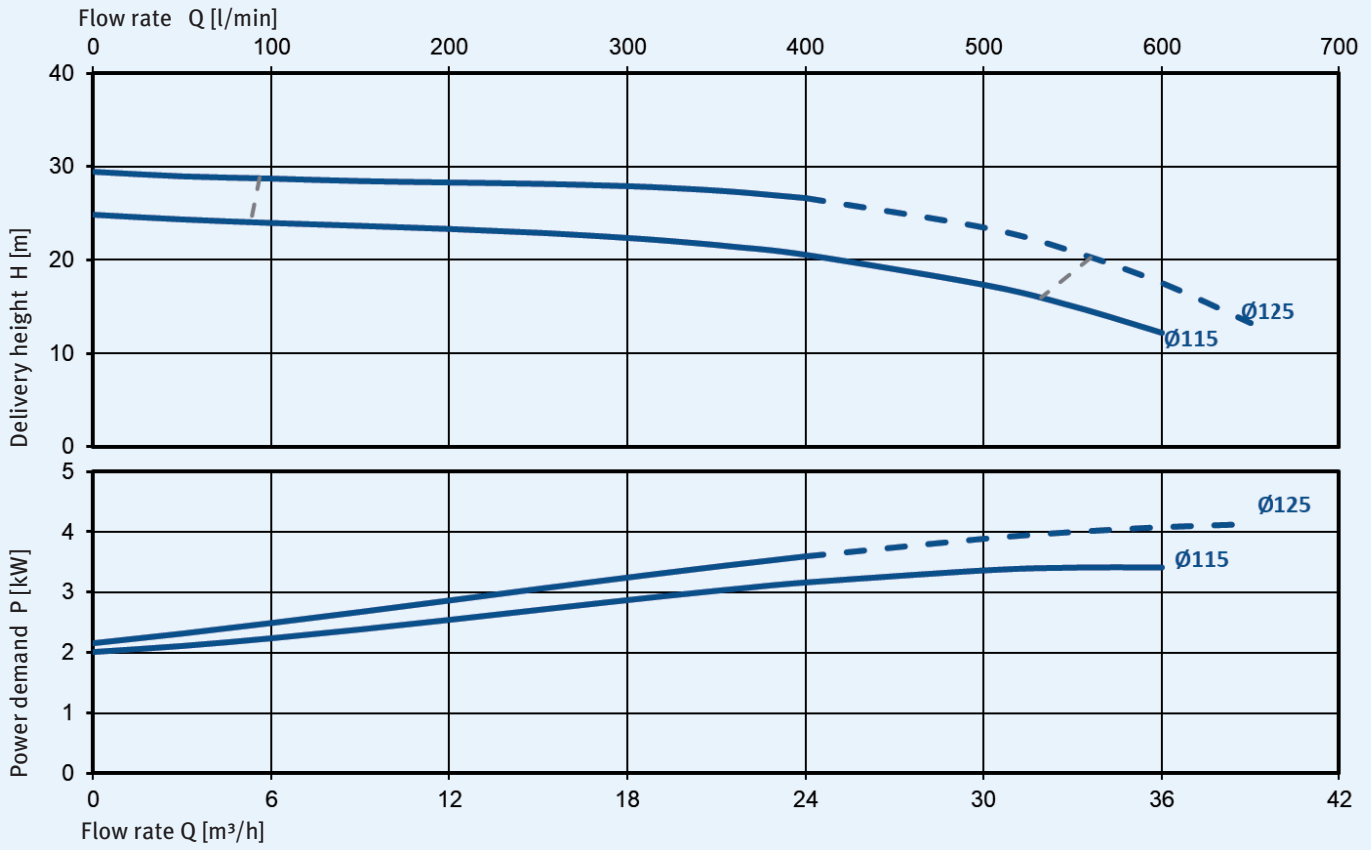

Clean medium pumps

KNOLL TG clean medium pumps are cooling lubricant pumps that convey media with light contamination. These pumps are able to supply machines with cleaned cooling lubricant.

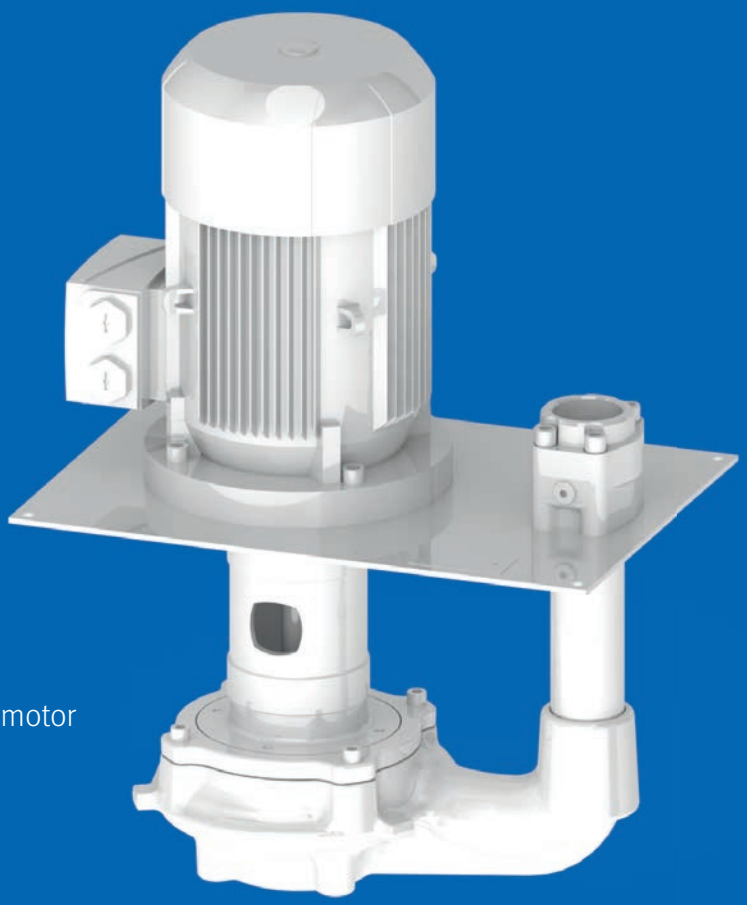

Properties

- No gaskets
- Flexible design with standard-dimensioned motor
- Energy efficient in combination with a frequency inverter
- Extremely high efficiency thanks to impeller flow design
- POM/GJL-250 impeller material

Dimensions

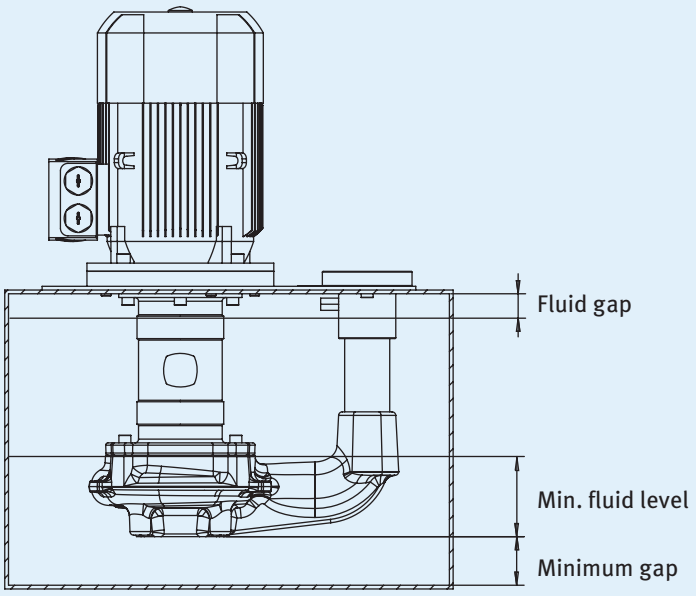

Maximum performance data

Type	Air proportion vol. [%]	Volume flow [l/min]	Delivery height [m]	Grain size [mm]	Chip length [mm]
TG 25	10	200	59	2	4
TG 30	10	350	28	1	3
TG 40	10	400	32	3	6
TG 50	10	1000	40	6	25

Fluid level

Type	Minimum gap [mm]	Min. fluid level [mm]	Fluid gap [mm]
TG 25	40	80	40
TG 30	60	60	40
TG 40	60	60	40
TG 50	65	105	40

Characteristic curve diagram

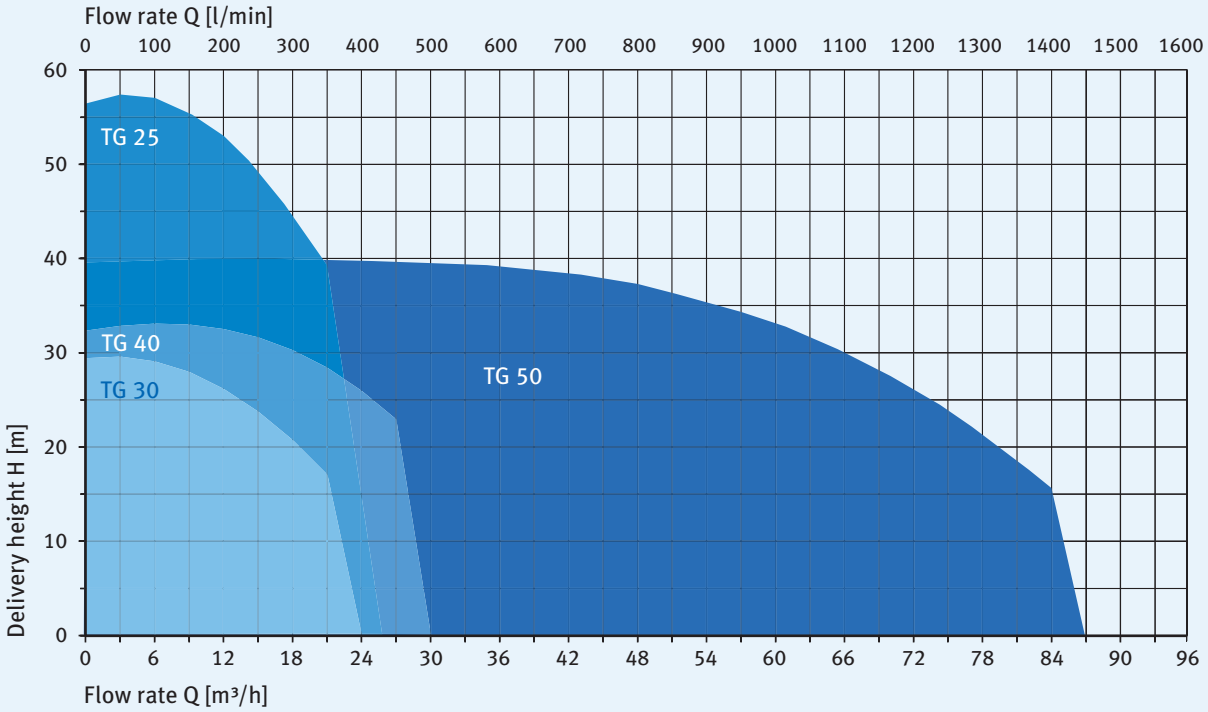

TG 25
clean medium pump

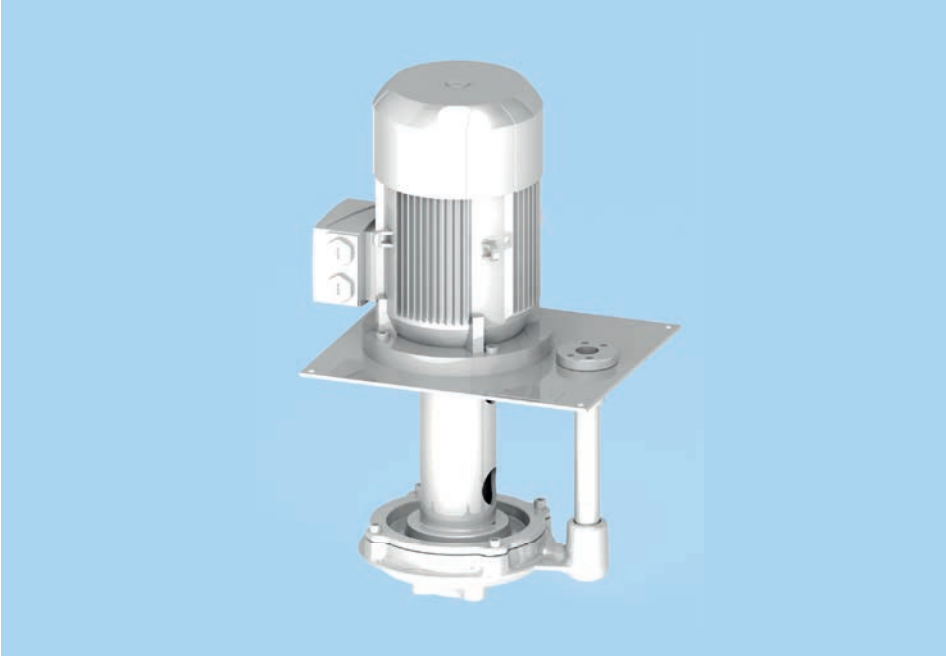

Variations

Type	D [mm]	H [mm]	Weight [kg]	Frequency [Hz]	Motor output [kW]	Sound pressure level [dB(A)]
TG 25-.../30 332	332	391	57	50/60	3.0	67/71
TG 25-.../40 332	332	374	67	50/60	4.0/3.7	69/73
TG 25-.../30 580	580	391	64	50/60	3.0	67/71
TG 25-.../40 580	580	374	74	50/60	4.0/3.7	69/73
TG 25-.../30 828	828	391	71	50/60	3.0	67/71
TG 25-.../40 828	828	374	81	50/60	4.0/3.7	69/73

Dimensions

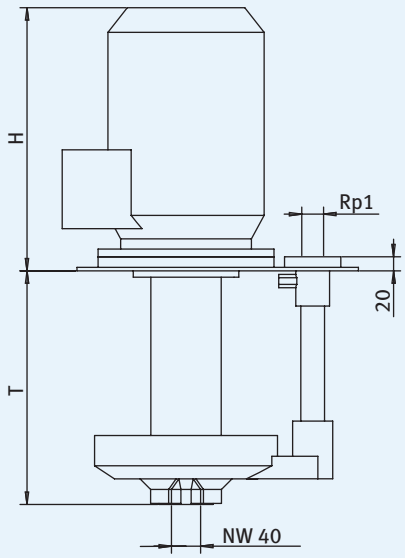

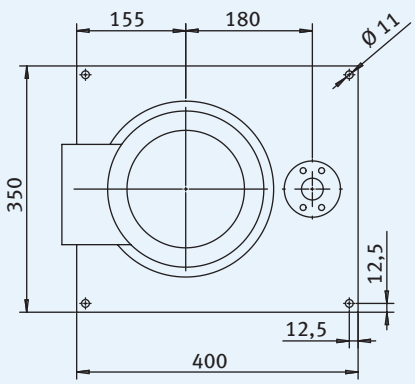

Characteristic curves for 2900 rpm, 50 Hz, 1 mm²/s

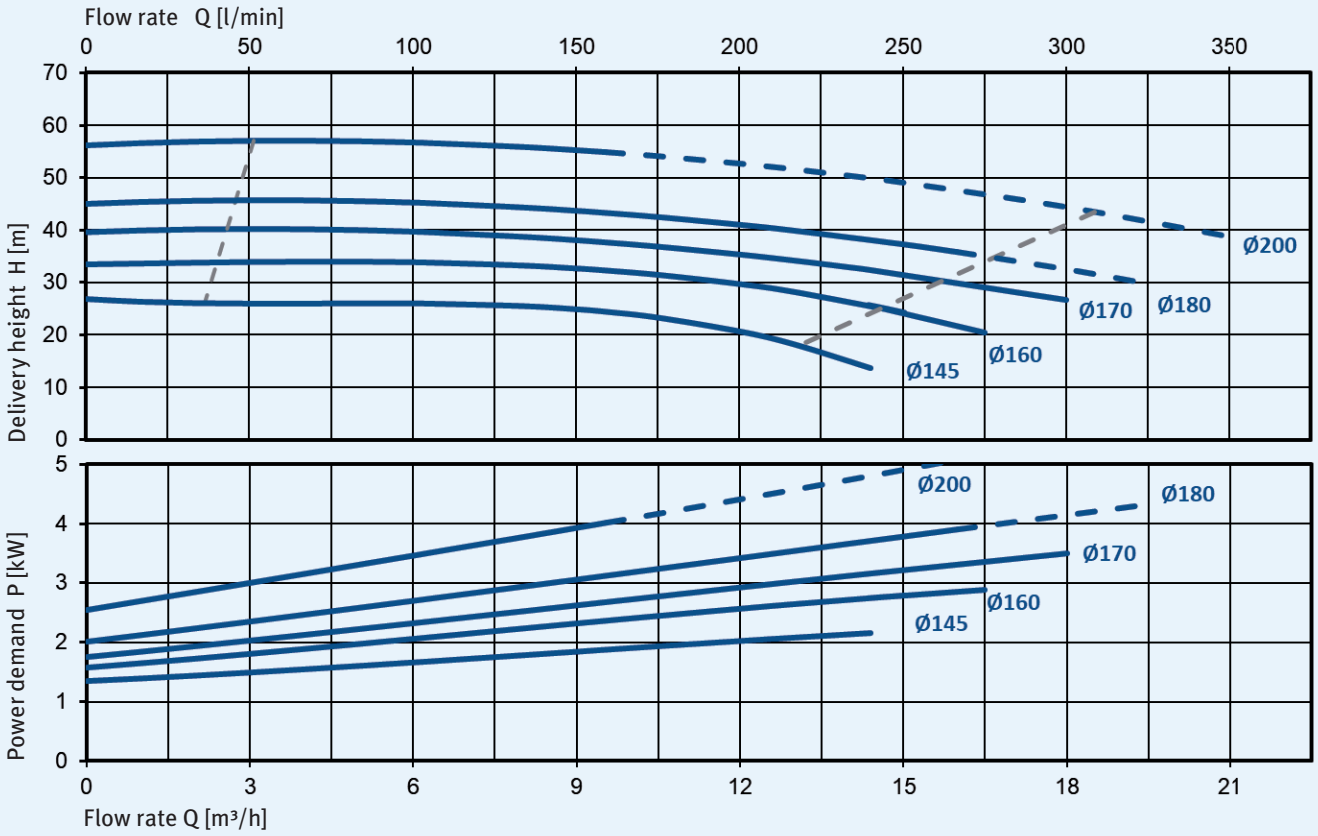

Characteristic curves for 3500 rpm, 60 Hz, 1 mm²/s

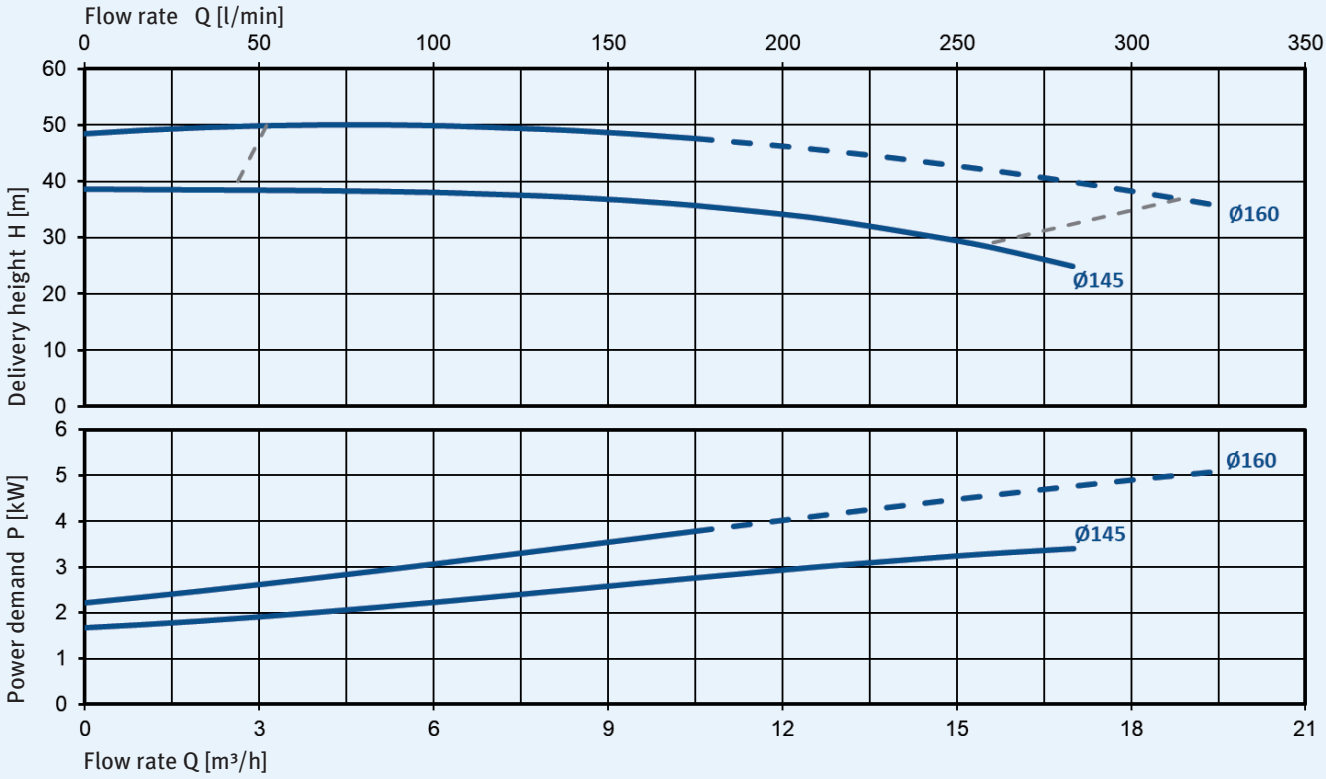

TG 30
clean medium pump

Variations

Type	D [mm]	H [mm]	Weight [kg]	Frequency [Hz]	Motor output [kW]	Sound pressure level [dB(A)]
TG 30-.../07 285	285	250	23	50	0.75	60
TG 30-.../11 285	285	250	24	50/60	1.1	60/63
TG 30-.../15 285	285	285	27	50/60	1.5	62/65
TG 30-.../22 285	285	285	30	50/60	2.2	62/65
TG 30-.../07 533	533	250	30	50	0.75	60
TG 30-.../11 533	533	250	31	50/60	1.1	60/63
TG 30-.../15 533	533	285	34	50/60	1.5	62/65
TG 30-.../22 533	533	285	37	50/60	2.2	62/65
TG 30-.../15 781	781	285	41	50/60	1.5	62/65
TG 30-.../22 781	781	285	44	50/60	2.2	62/65

Dimensions

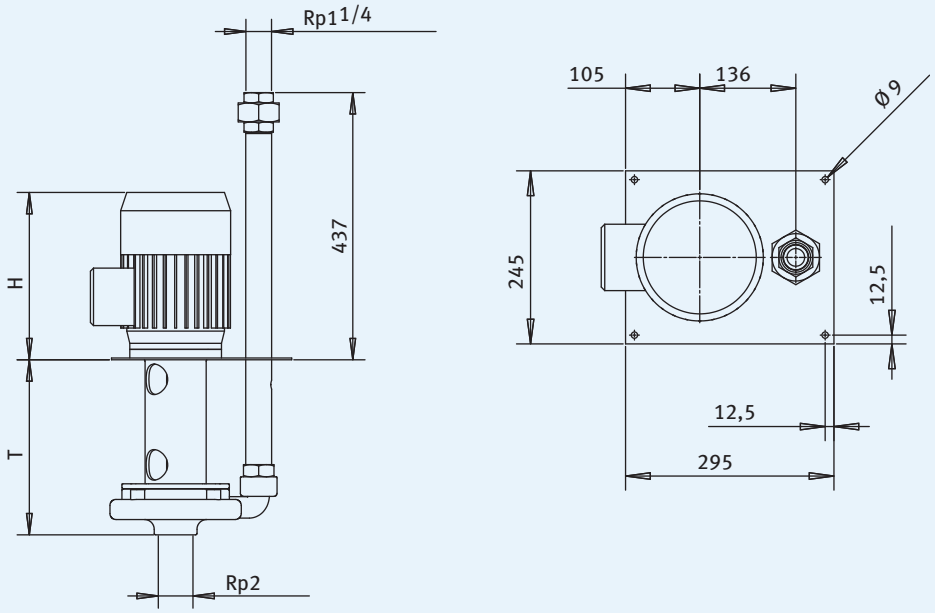

Characteristic curves for 2900 rpm, 50 Hz, 1 mm²/s

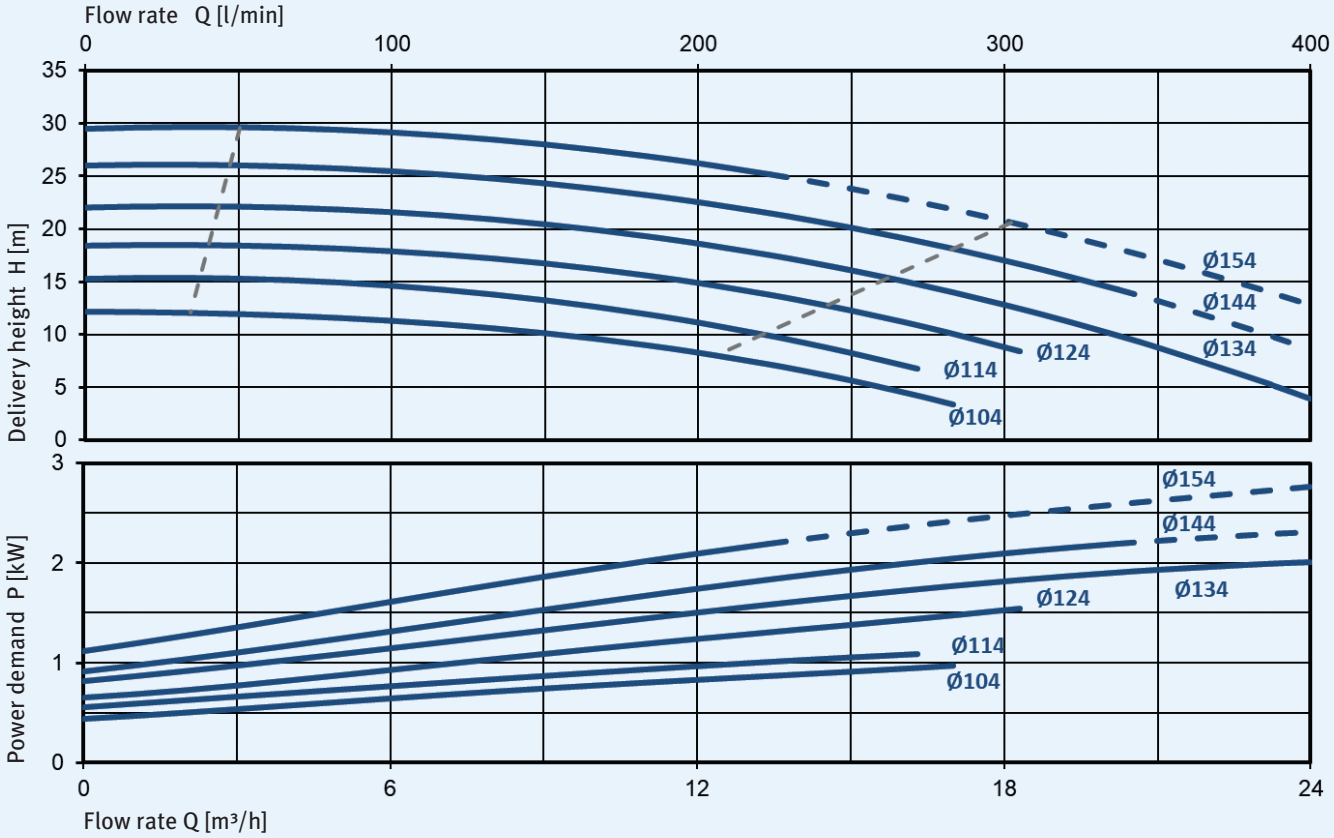

Characteristic curves for 3500 rpm, 60 Hz, 1 mm²/s

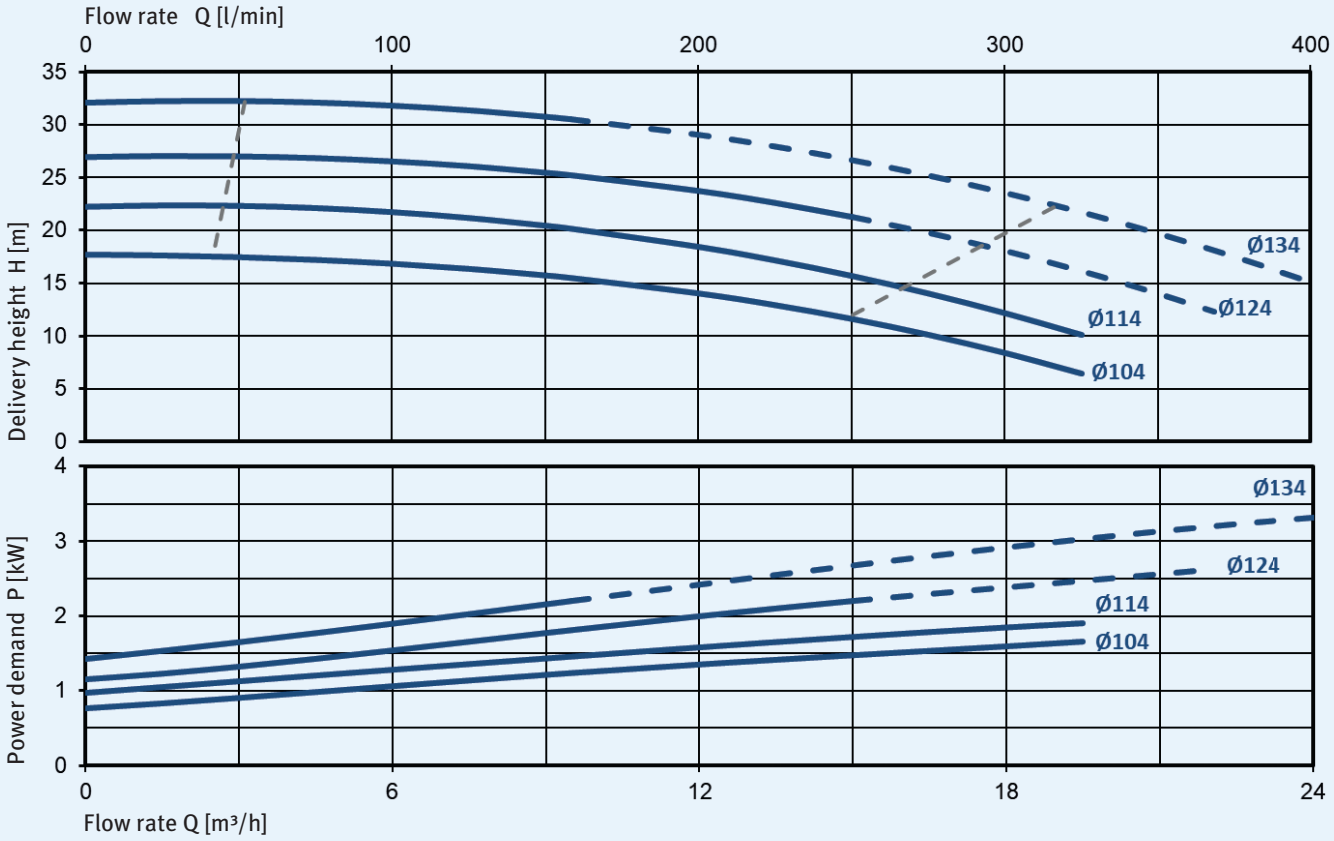

TG 40
clean medium pump

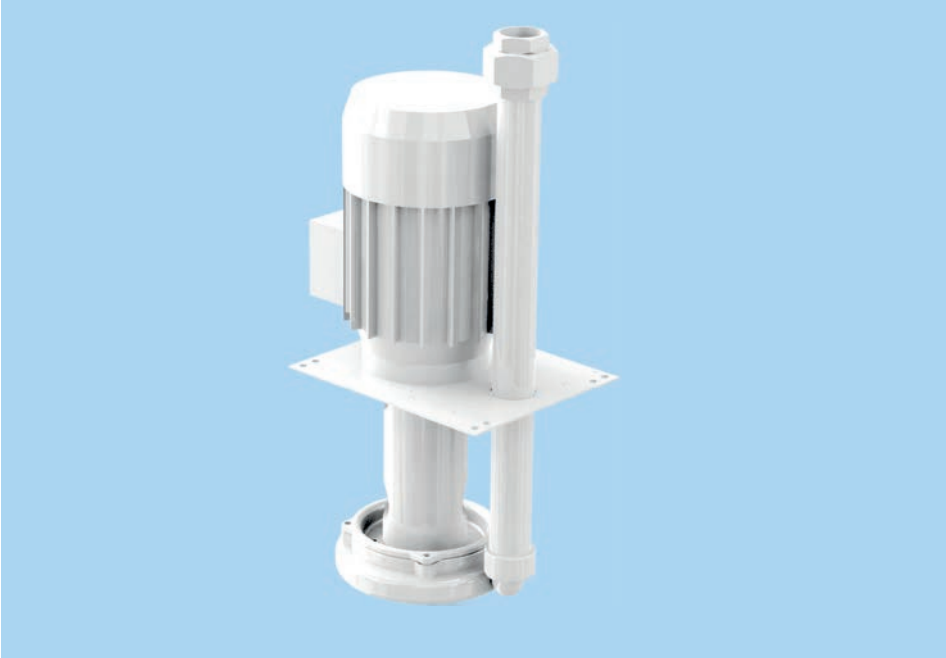

Variations

Type	D [mm]	H [mm]	Weight [kg]	Frequency [Hz]	Motor output [kW]	Sound pressure level [dB(A)]
TG 40-.../11 285	285	250	25	50	1.1	60
TG 40-.../15 285	285	285	28	50/60	1.5	62/65
TG 40-.../22 285	285	285	31	50/60	2.2	62/65
TG 40-.../30 285	285	325	35	50/60	3.0	66/69
TG 40-.../11 533	533	250	32	50	1.1	60
TG 40-.../15 533	533	285	35	50/60	1.5	62/65
TG 40-.../22 533	533	285	38	50/60	2.2	62/65
TG 40-.../30 533	533	325	42	50/60	3.0	66/69
TG 40-.../15 781	781	285	42	50/60	1.5	62/65
TG 40-.../22 781	781	285	45	50/60	2.2	66/69
TG 40-.../30 781	781	325	49	50/60	3.0	66/69

Dimensions

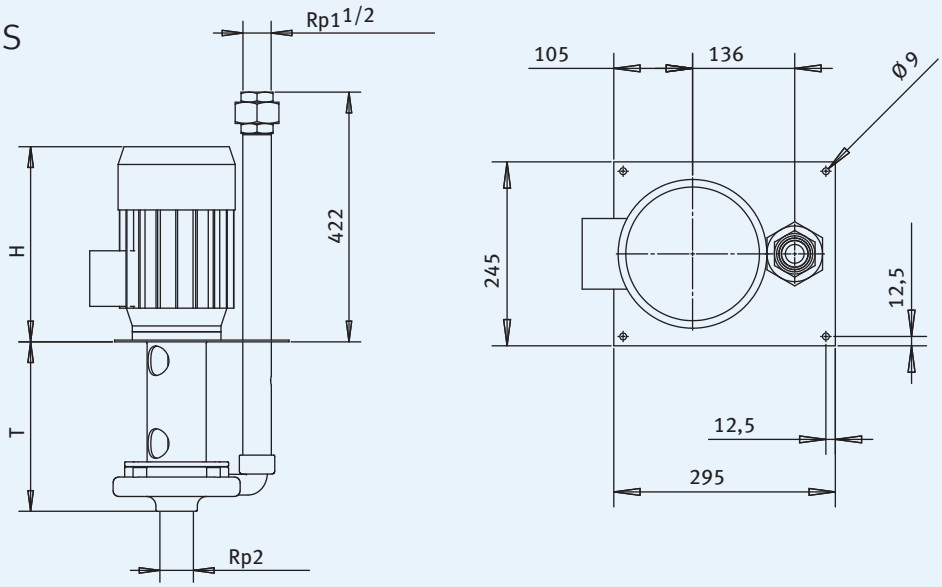

Characteristic curves for 2900 rpm, 50 Hz, 1 mm²/s

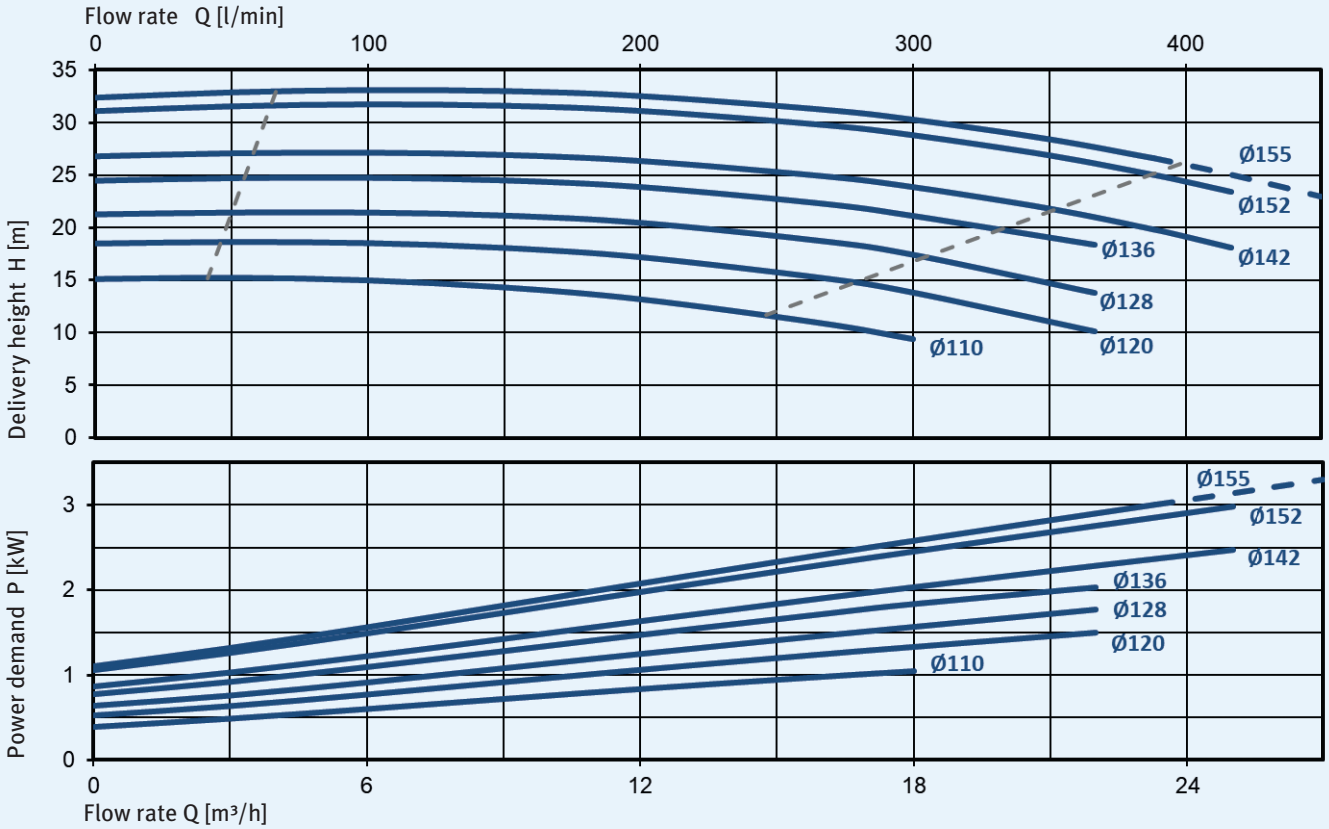

Characteristic curves for 3500 rpm, 60 Hz, 1 mm²/s

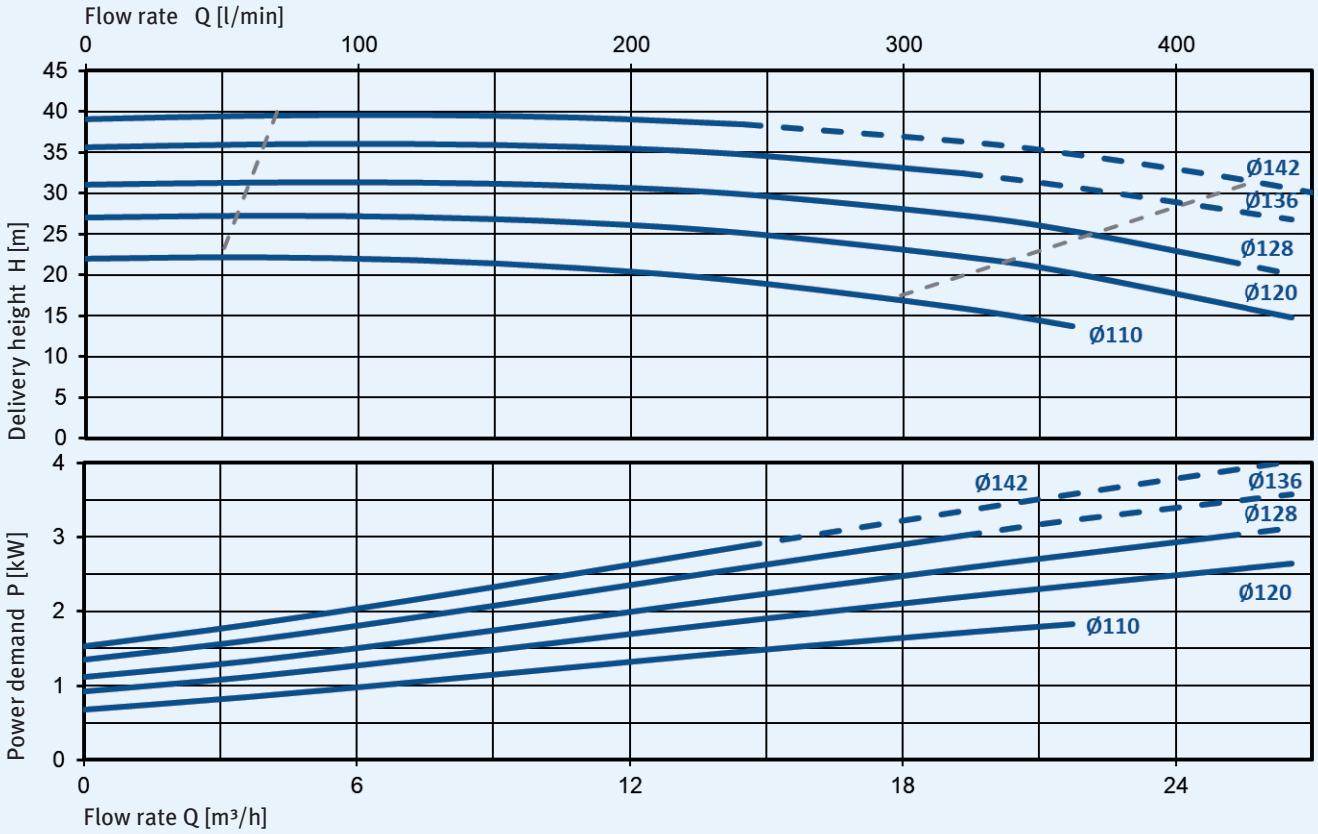

TG 50
clean medium pump

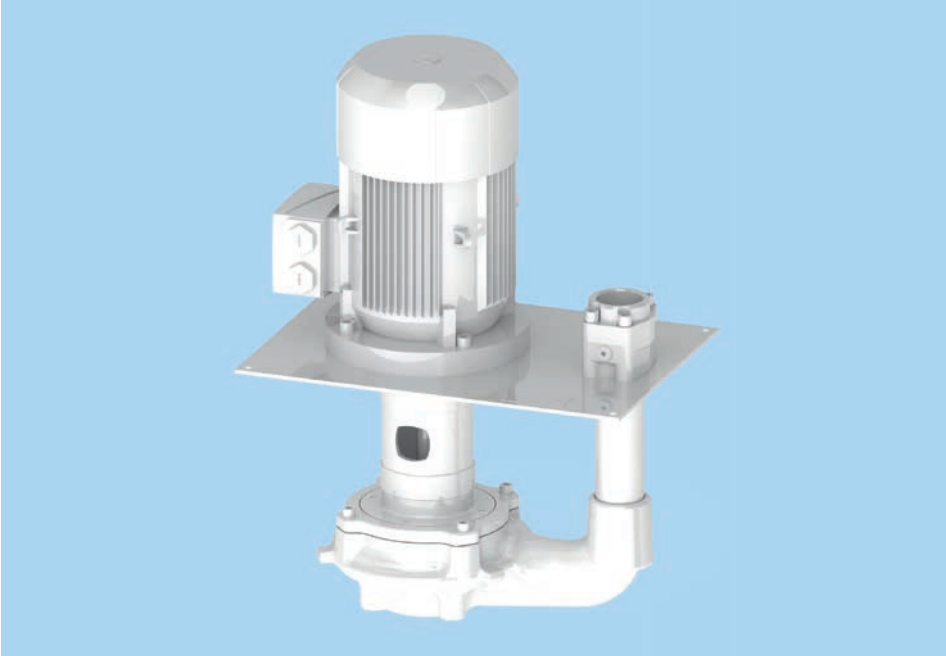

Variations

Type	D [mm]	H [mm]	Weight [kg]	Frequency [Hz]	Motor output [kW]	Sound pressure level [dB(A)]
TG 50-20/40 440	440	379	82	50	4.0	69
TG 50-20/40 880	880	379	98	50	4.0	69
TG 50-35/55 440	440	410	96	50	5.5	68
TG 50-35/55 880	880	410	114	50	5.5	68
TG 50-50/75 440	440	460	111	50	7.5	68
TG 50-50/75 880	880	460	129	50	7.5	68
TG 50-65/75 440	440	460	111	50	7.5	68
TG 50-65/75 880	880	460	130	50	7.5	68
TG 50-20/55 440	440	410	95	60	5.5	72
TG 50-20/55 880	880	410	114	60	5.5	72
TG 50-35/75 440	440	460	110	60	7.5	72
TG 50-35/75 880	880	460	128	60	7.5	72

*The following depths of immersion can be provided on request: 330 mm, 550 mm, 660 mm and 770 mm

Dimensions

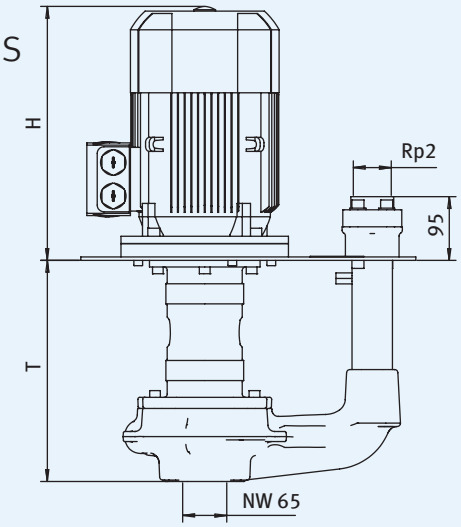

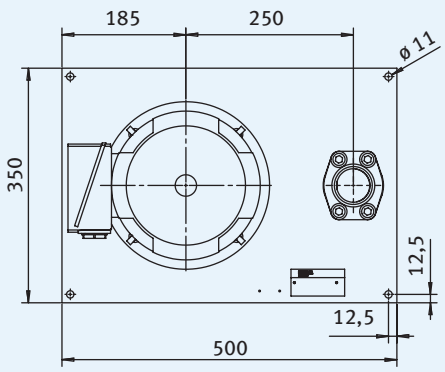

Characteristic curves for 2900 rpm, 50 Hz, 1 mm²/s

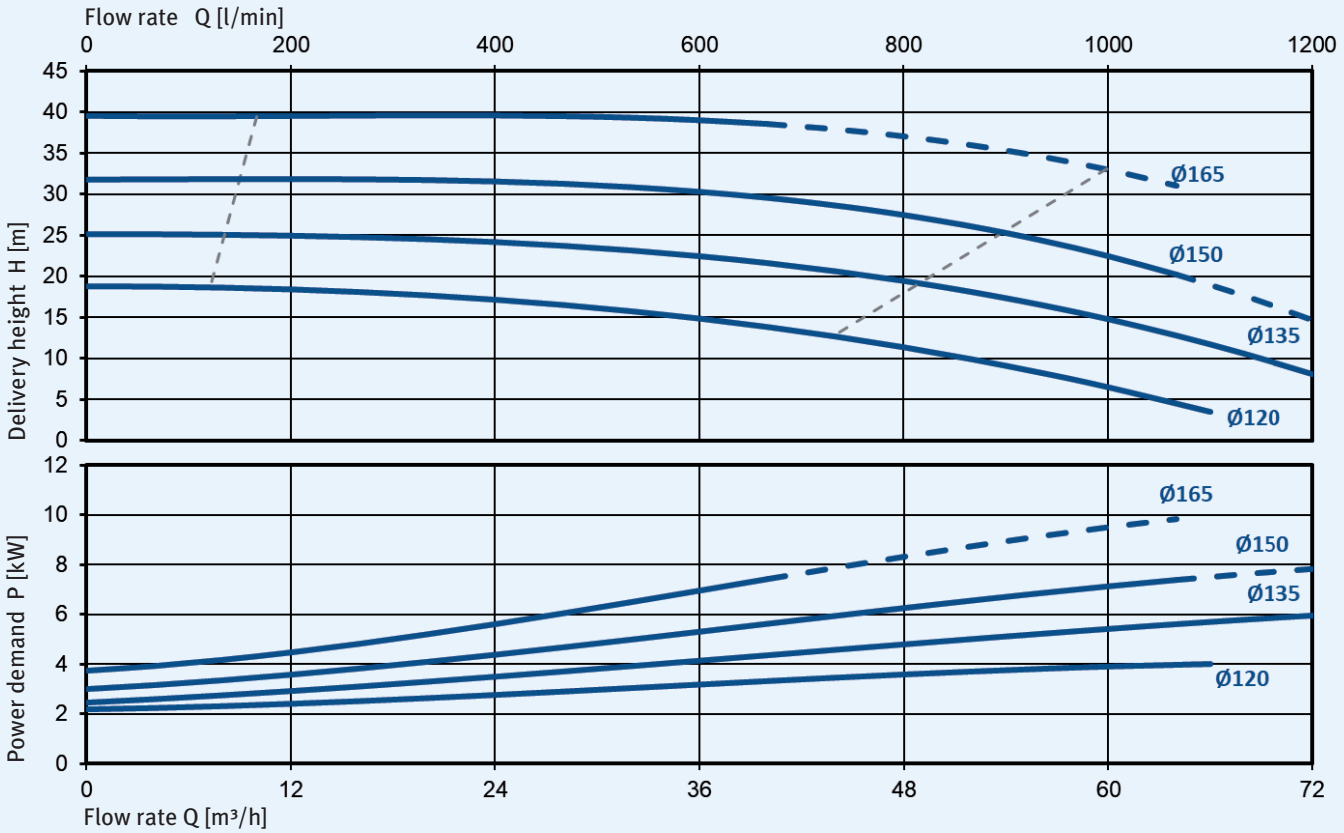

Characteristic curves for 3500 rpm, 60 Hz, 1 mm²/s

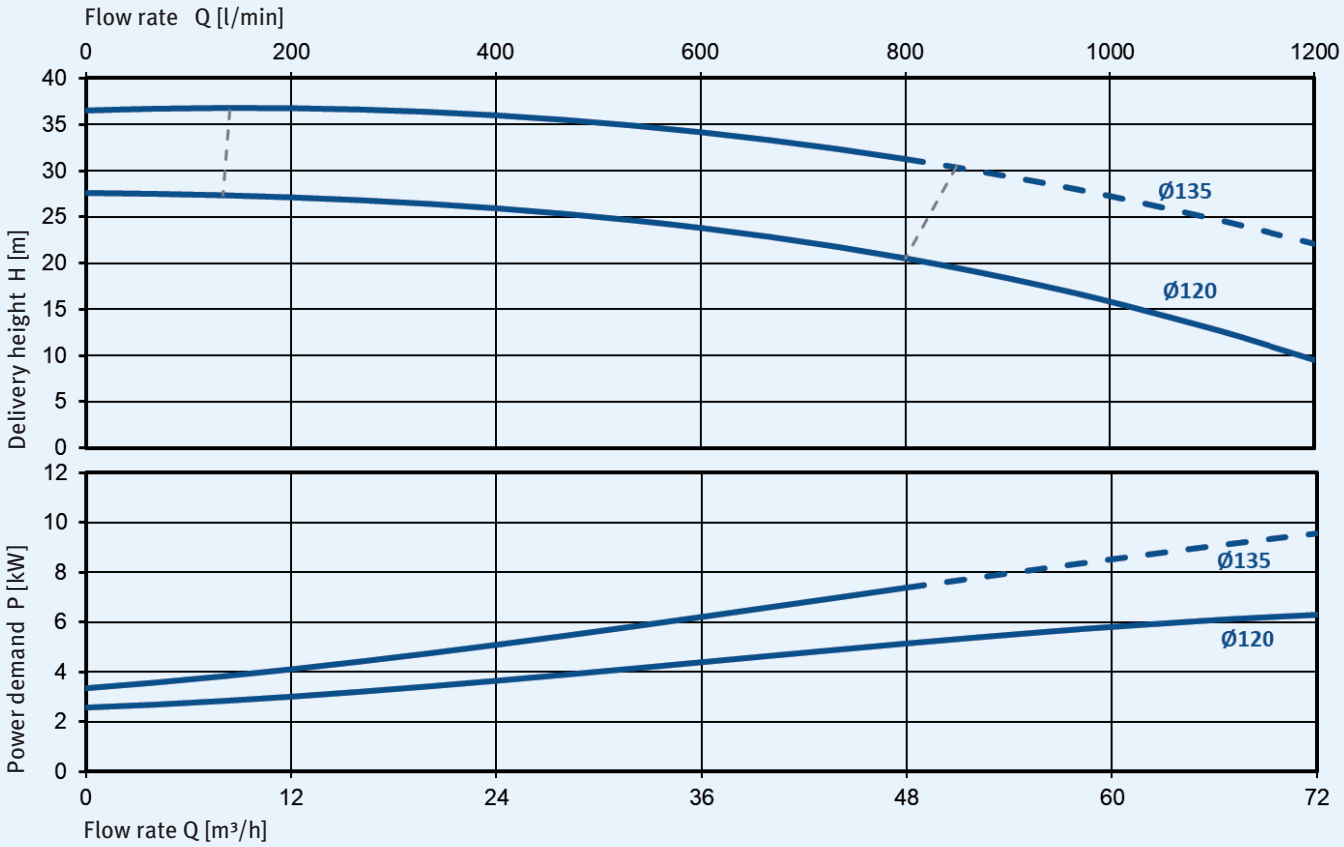

Contaminated medium pumps

KNOLL TF, TS, TSK and TSL contaminated medium pumps are cooling lubricant pumps that convey heavily contaminated media. These pumps are able to transport the mixture of chips and cooling lubricant to the filter or separator.

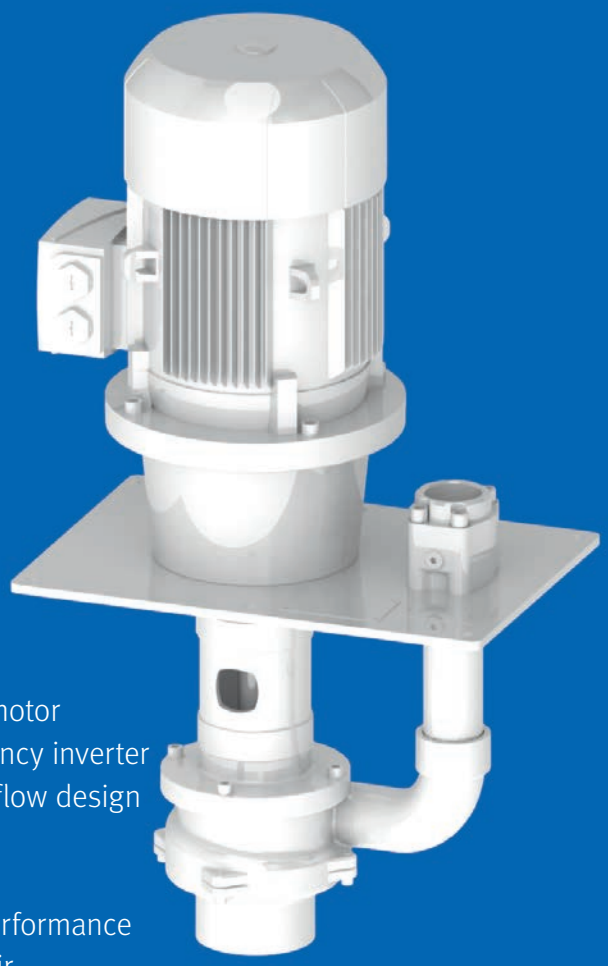

Properties

- No gaskets
- Flexible design with standard-dimensioned motor
- Energy efficient in combination with a frequency inverter
- Extremely high efficiency thanks to impeller flow design
- POM/GJL-250/ST impeller material
- Wear-resistant component design
- With pre-fitted inducer to improve suction performance with media containing a high proportion of air

Dimensions

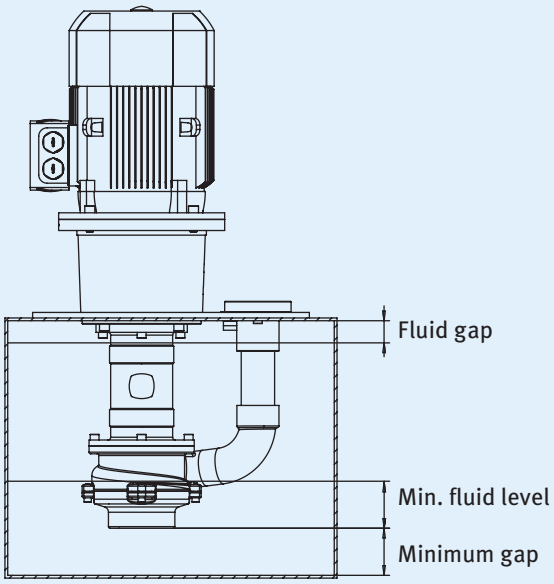

Maximum performance data

Type	Air proportion vol. [%]	Volume flow [l/min]	Delivery height [m]	Grain size [mm]	Chip length [mm]	Chip transport [g/l]
TF 40	10	650	18	15	40	2
TF 50	10	1200	26	30	70	5
TS 40	10	550	18	12	20	2
TSK 40	10	600	17	20	40	5
TSK 50	10	1200	28	20	40	7
TSK 65	10	1500	38	20	40	10
TSL 40	10	500	22	15	40	5

Fluid level

Type	Minimum gap [mm]	Min. fluid level [mm]	Fluid gap [mm]
TF 40	60	110	40
TF 50	75	150	40
TS 40	60	110	40
TSK 40	70	80	40
TSK 50	100	95	40
TSK 65	100	80	40
TSL 40	40	56	40

Characteristic curve diagram

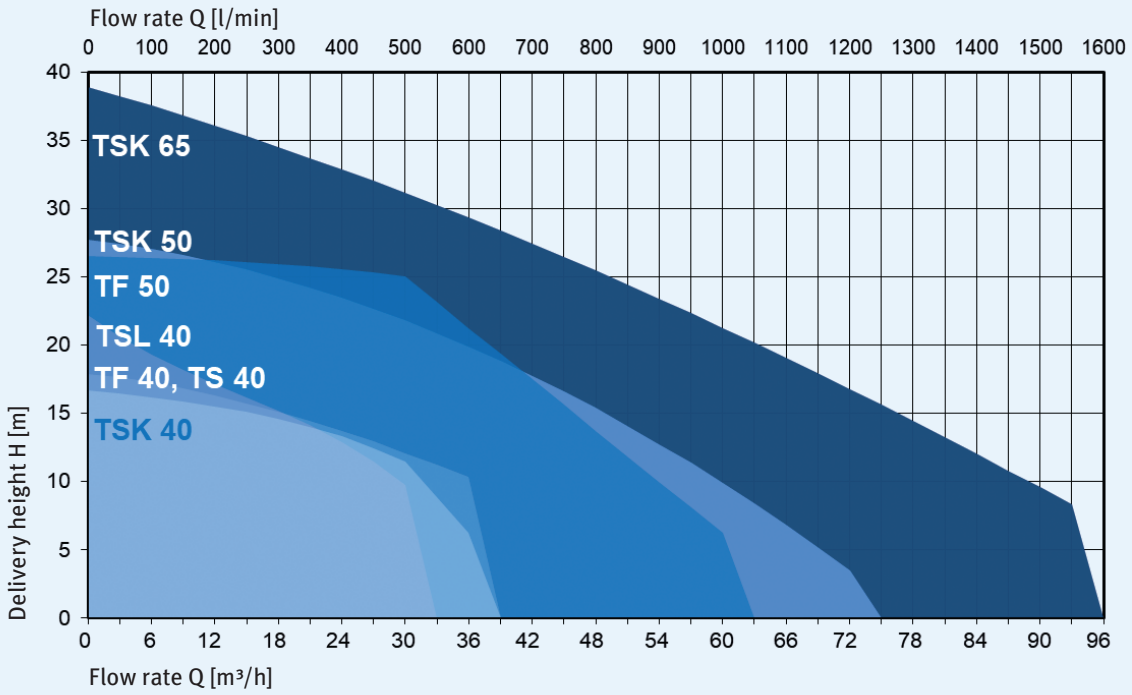

TF 40 contaminated medium pump

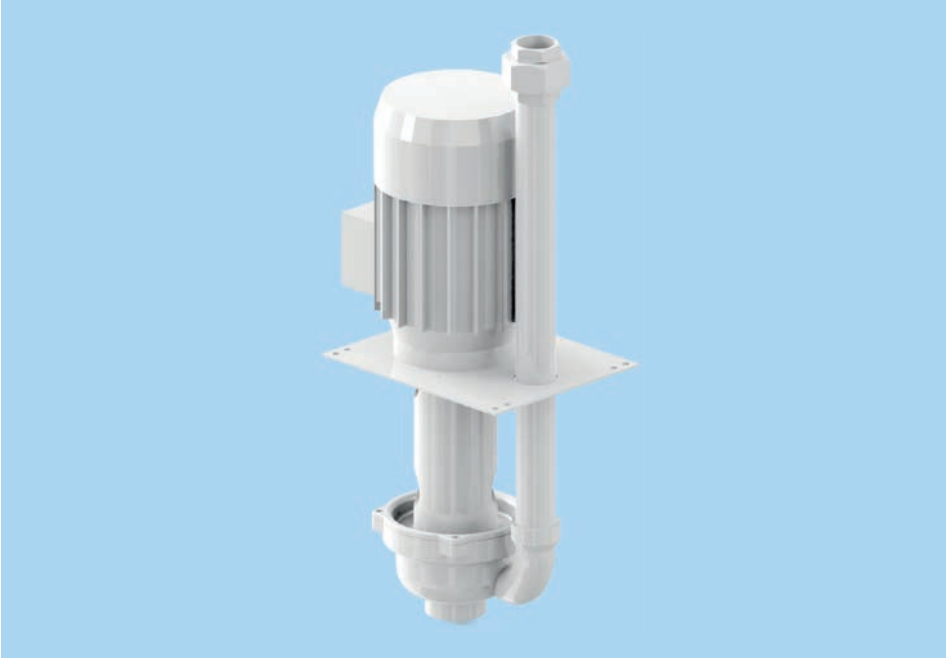

Variations

Type	D [mm]	H [mm]	Weight [kg]	Frequency [Hz]	Motor output [kW]	Sound pressure level [dB(A)]
TF 40-.../07 330	330	250	26	50	0.75	60
TF 40-.../11 330	330	250	27	50/60	1.1	60/63
TF 40-.../15 330	330	285	30	50/60	1.5	62/65
TF 40-.../22 330	330	285	33	50/60	2.2	62/65
TF 40-.../30 330	330	325	37	50/60	3.0	66/69
TF 40-.../07 578	578	250	33	50	0.75	60
TF 40-.../11 578	578	250	34	50/60	1.1	60/63
TF 40-.../15 578	578	285	37	50/60	1.5	62/65
TF 40-.../22 578	578	285	40	50/60	2.2	62/65
TF 40-.../15 826	826	285	44	50/60	1.5	62/65
TF 40-.../22 826	826	285	47	50/60	2.2	62/65
TF 40-.../30 826	826	325	51	50/60	3.0	66/65

Dimensions

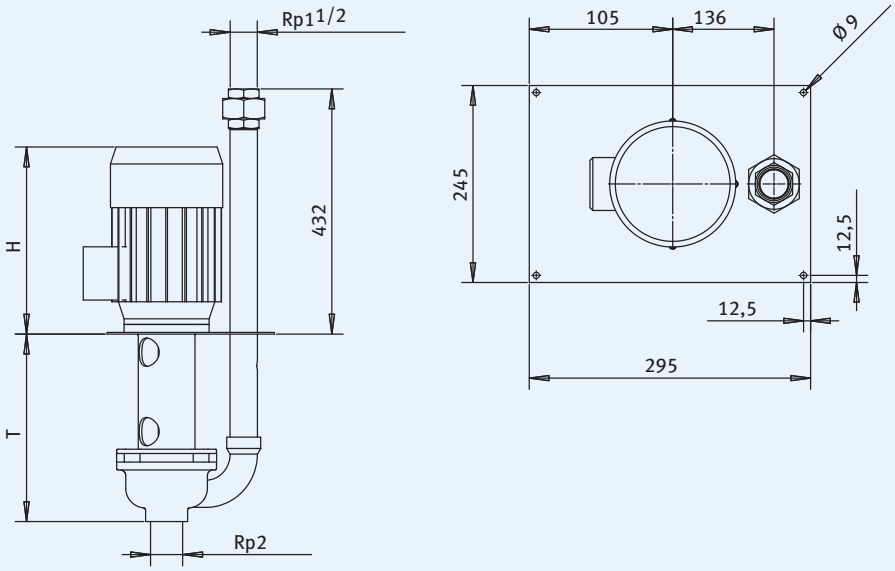

Characteristic curves for 2900 rpm, 50 Hz, 1 mm²/s

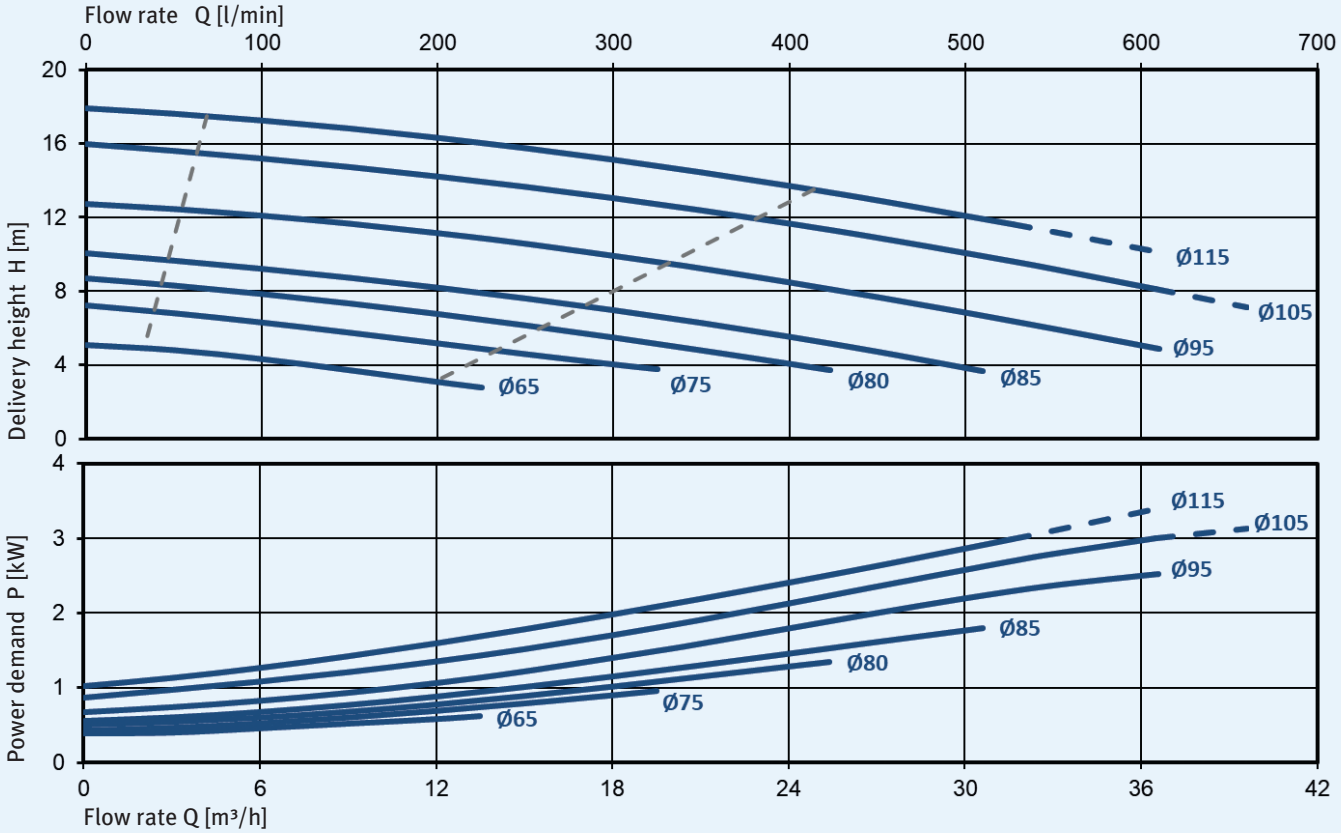

Characteristic curves for 3500 rpm, 60 Hz, 1 mm²/s

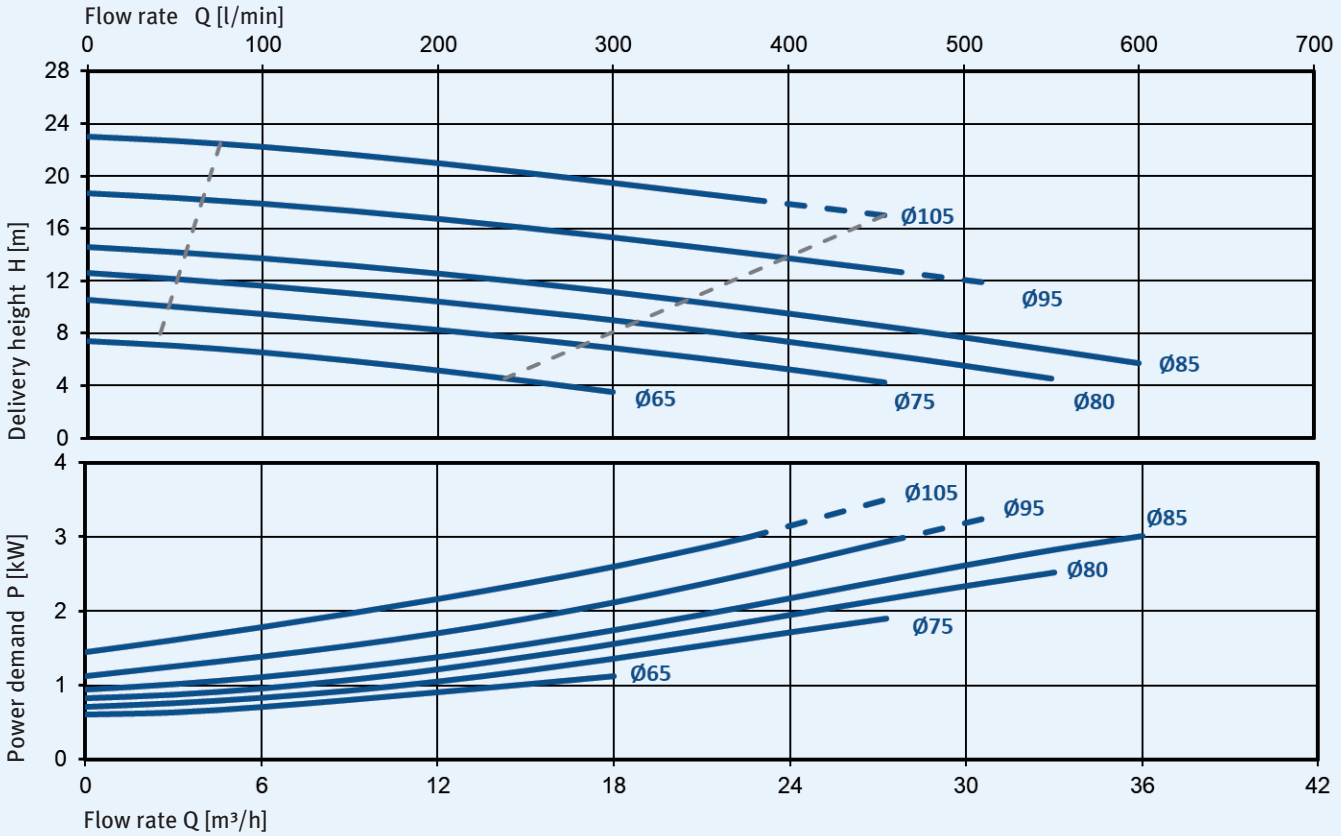

TF 50 contaminated medium pump

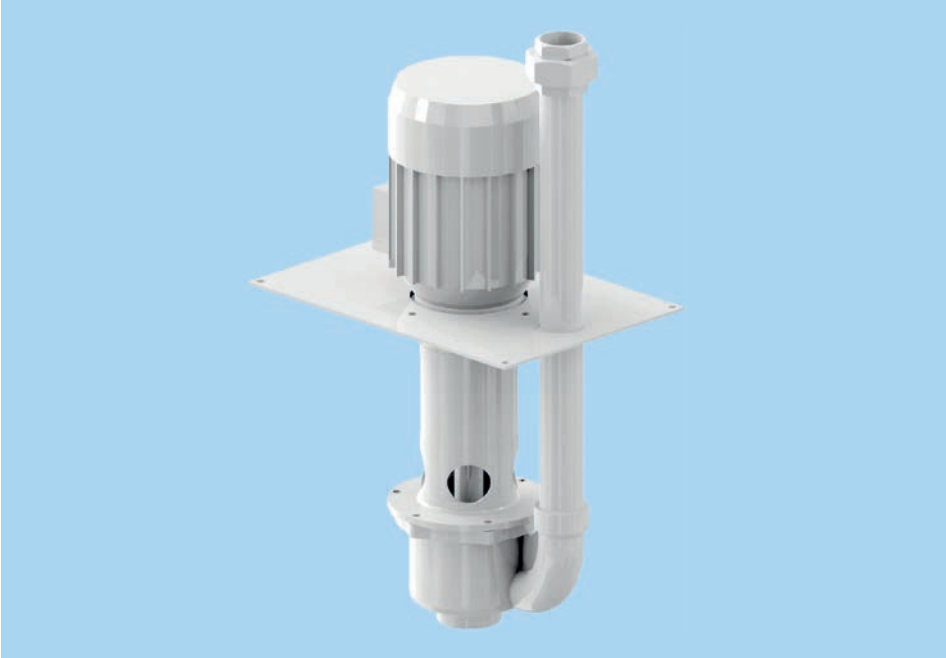

Variations

Type	D [mm]	H [mm]	Weight [kg]	Frequency [Hz]	Motor output [kW]	Sound pressure level [dB(A)]
TF 50-.../40 488	488	328	68	50/60	4.0/3.7	68/71
TF 50-.../55 488	488	328	75	50/60	5.5	68/71
TF 50-.../40 848	848	328	78	50/60	4.0/3.7	68/71
TF 50-.../55 848	848	328	85	50/60	5.5	68/71

Dimensions

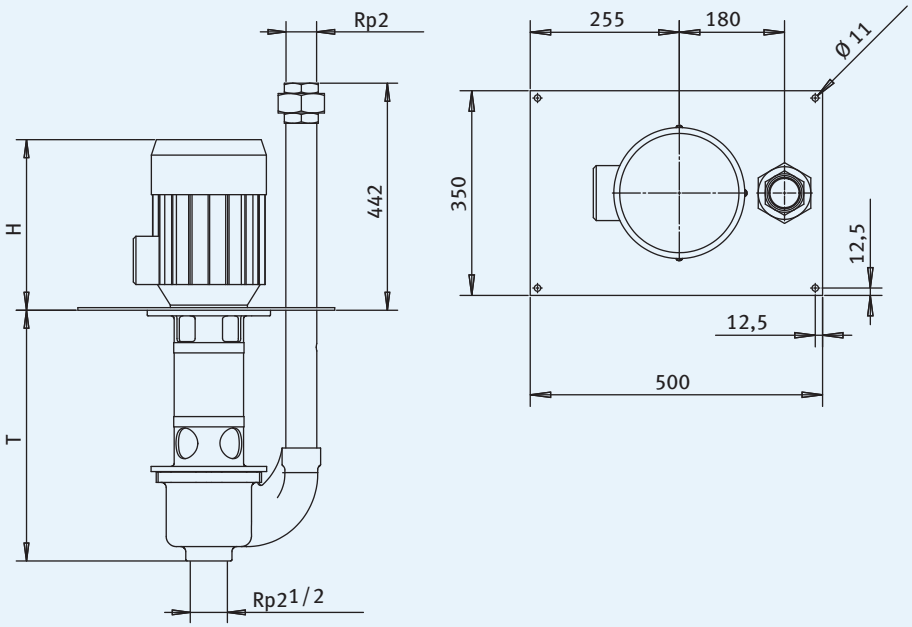

Characteristic curves for 2900 rpm, 50 Hz, 1 mm²/s

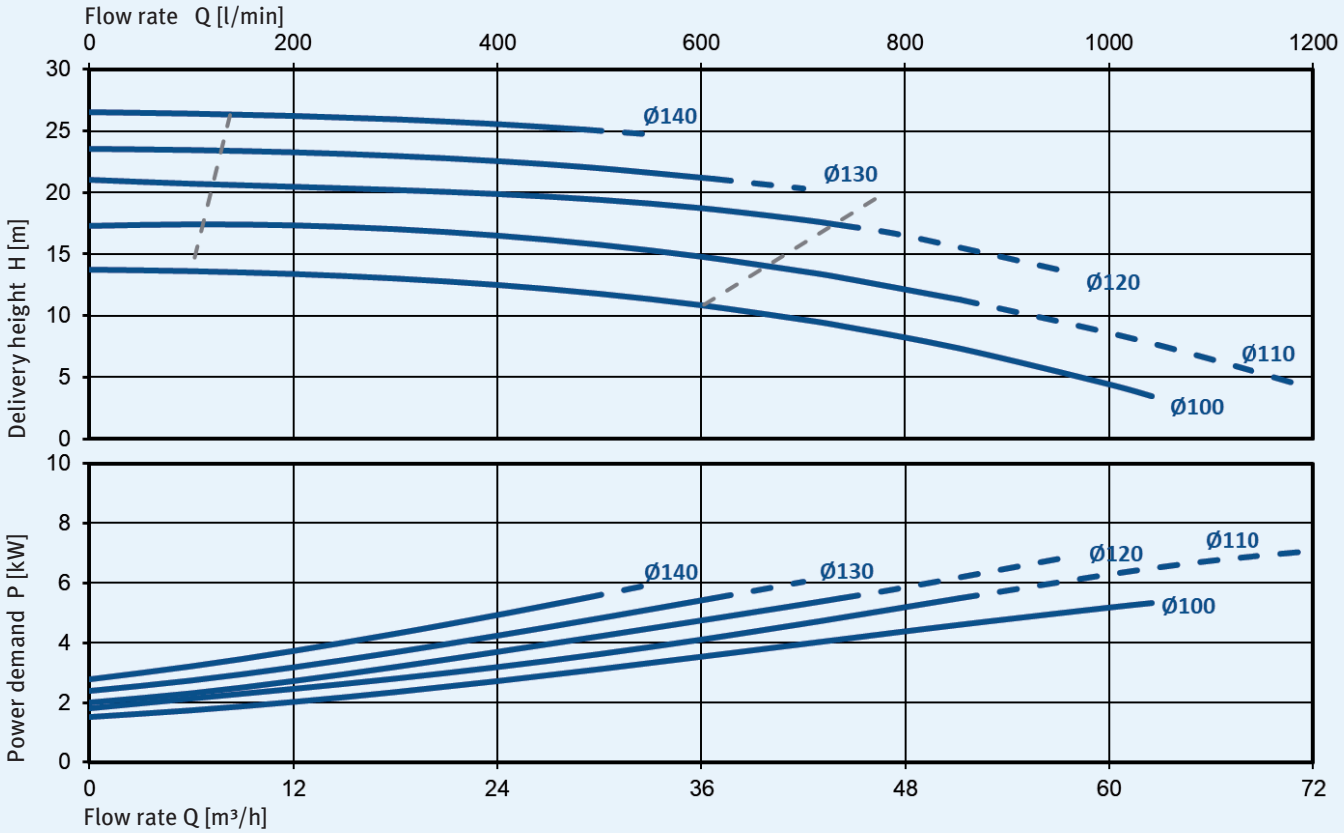

Characteristic curves for 3500 rpm, 60 Hz, 1 mm²/s

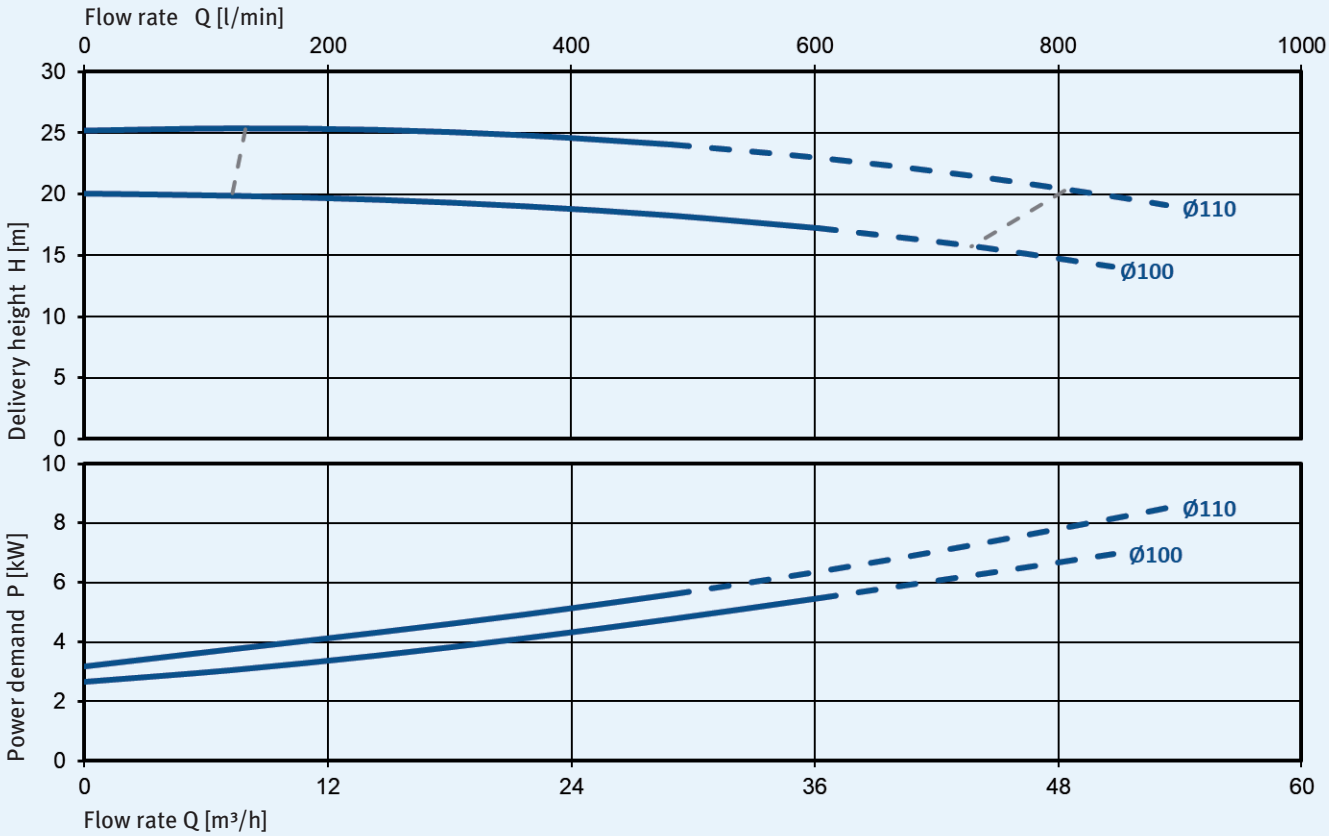

TS 40 contaminated medium pump

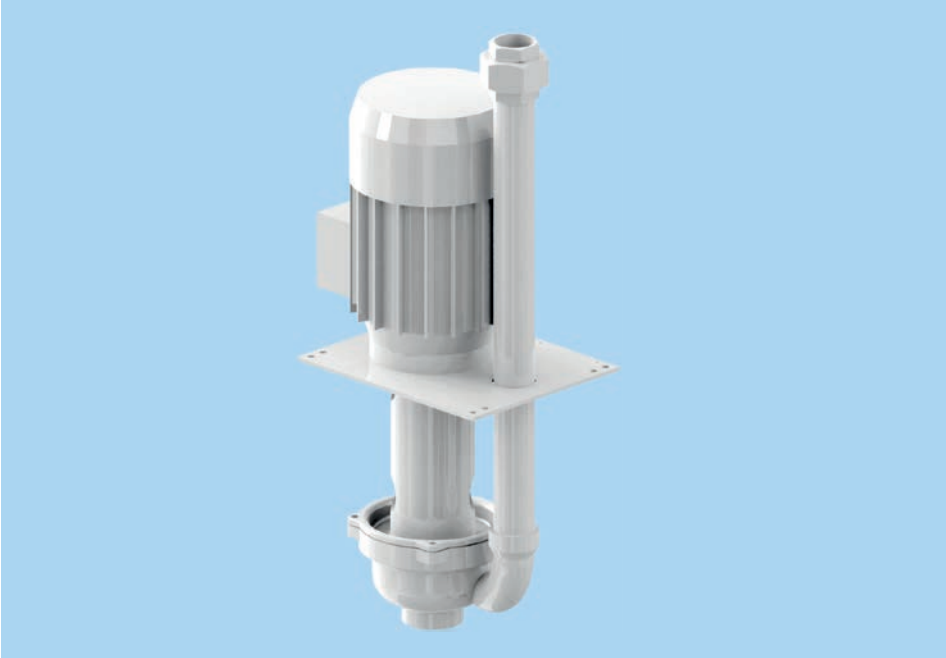

Variations

Type	D [mm]	H [mm]	Weight [kg]	Frequency [Hz]	Motor output [kW]	Sound pressure level [dB(A)]
TS 40-21/22 338	338	285	33	50/60	2.2	62/65
TS 40-21/30 338	338	325	37	50/60	3.0	66/69
TS 40-21/22 586	586	285	40	50/60	2.2	62/65
TS 40-21/30 586	586	325	44	50/60	3.0	66/69
TS 40-21/22 834	834	285	47	50/60	2.2	62/65
TS 40-21/30 834	834	325	51	50/60	3.0	66/69

Dimensions

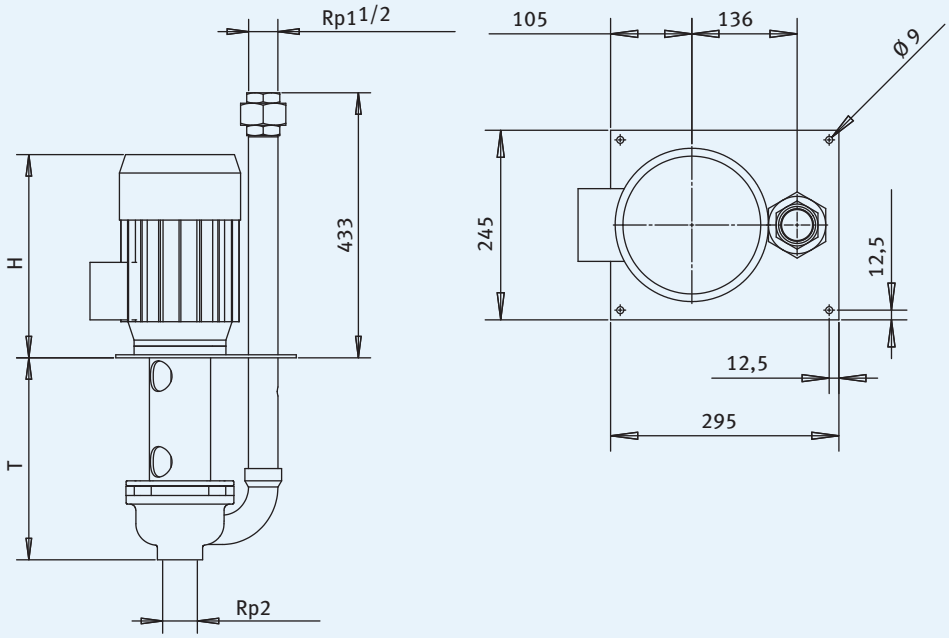

Characteristic curves for 2900 rpm, 50 Hz, 1 mm²/s

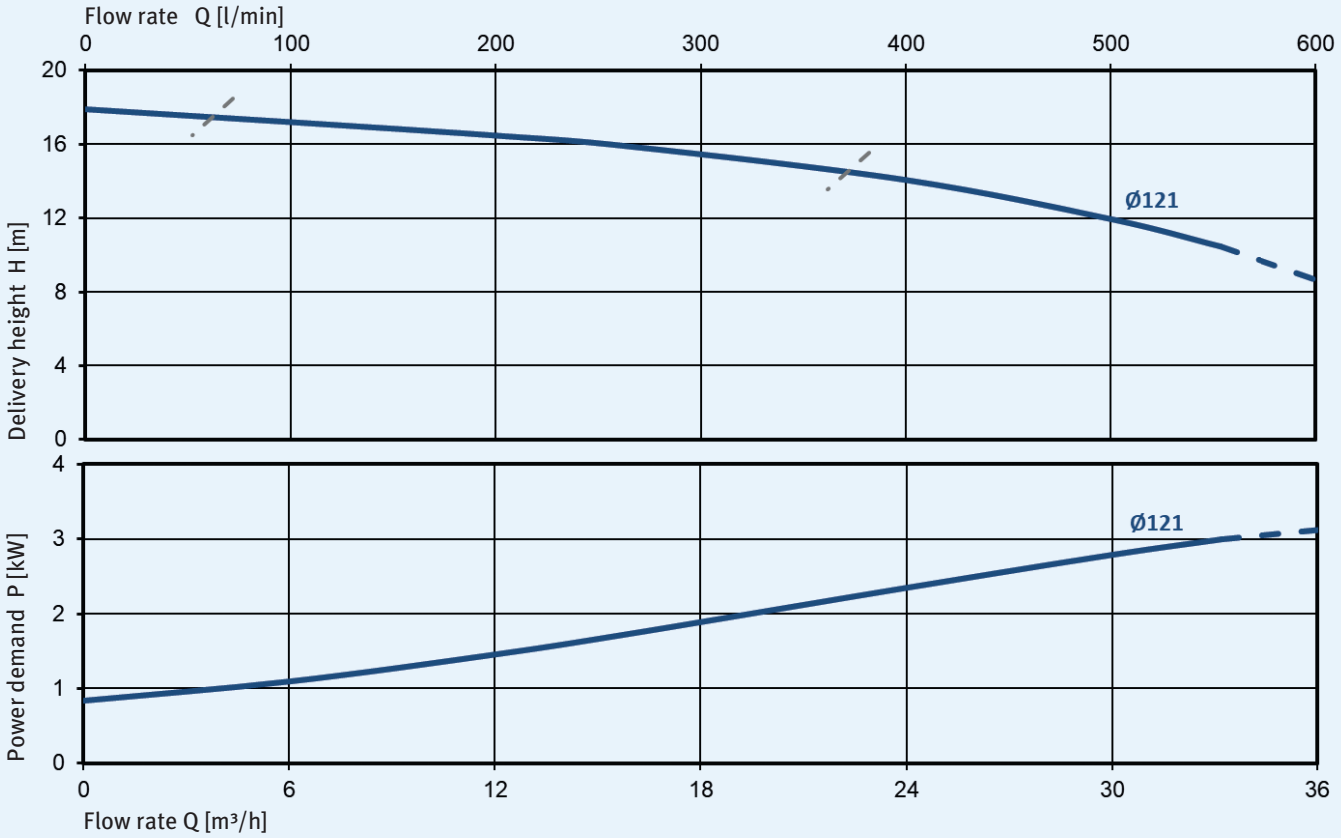

Characteristic curves for 3500 rpm, 60 Hz, 1 mm²/s

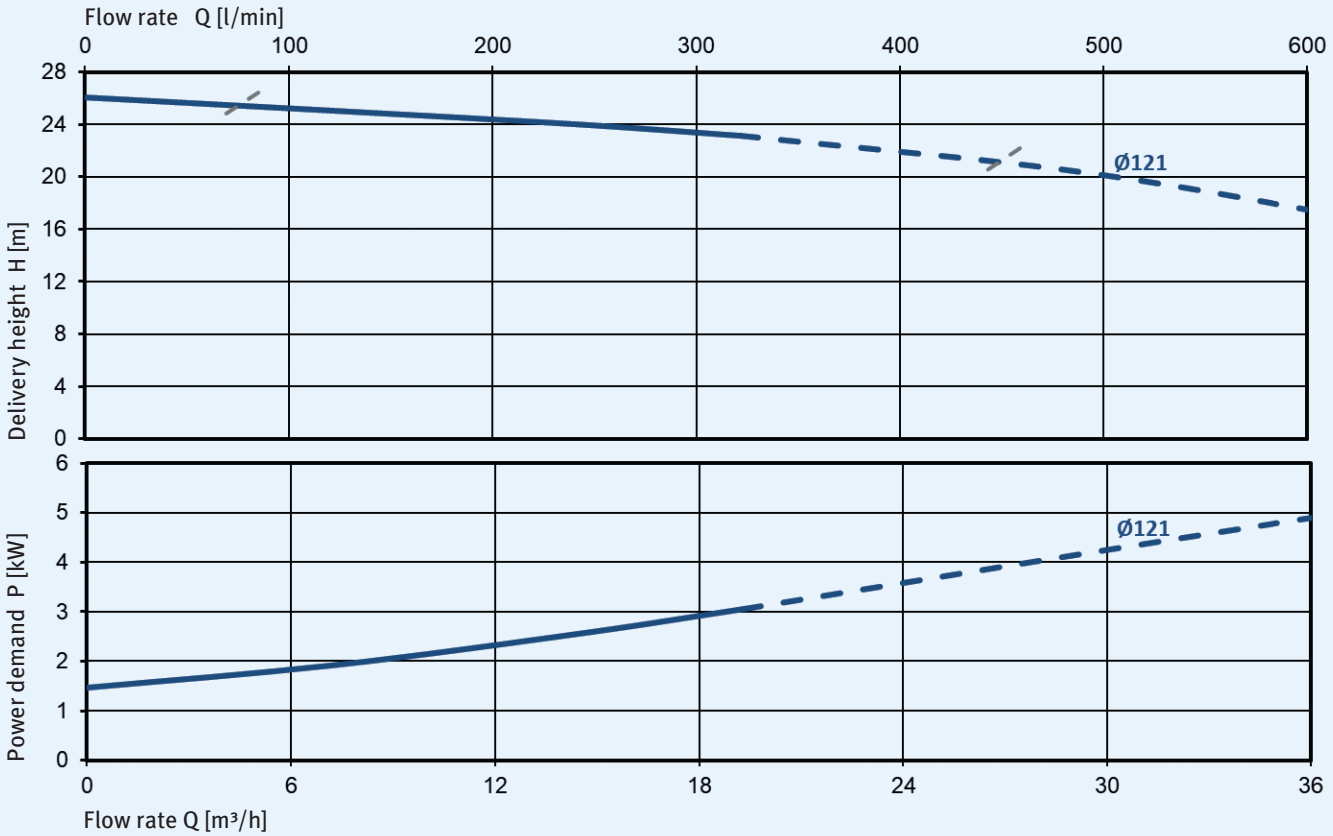

TSK 40 contaminated medium pump

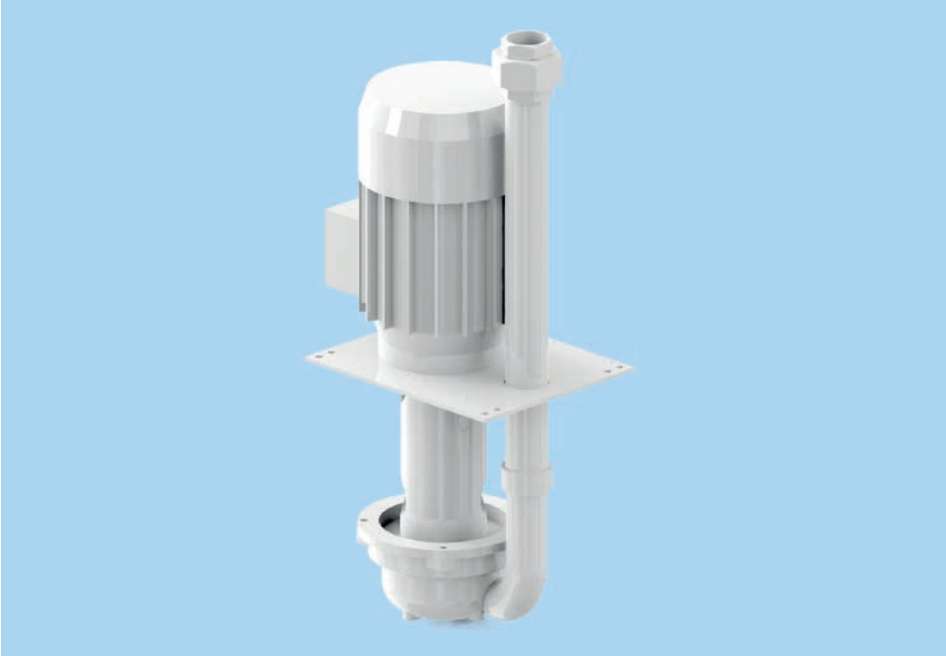

Variations

Type	D [mm]	H [mm]	Weight [kg]	Frequency [Hz]	Motor output [kW]	Sound pressure level [dB(A)]
TSK 40-.../22 310	310	285	33	50/60	2.2	62/65
TSK 40-.../30 310	310	325	37	50/60	3.0	66/69
TSK 40-.../22 558	558	285	40	50/60	2.2	62/65
TSK 40-.../30 558	558	325	44	50/60	3.0	66/69
TSK 40-.../22 806	806	285	47	50/60	2.2	62/65
TSK 40-.../30 806	806	325	51	50/60	3.0	66/69

Dimensions

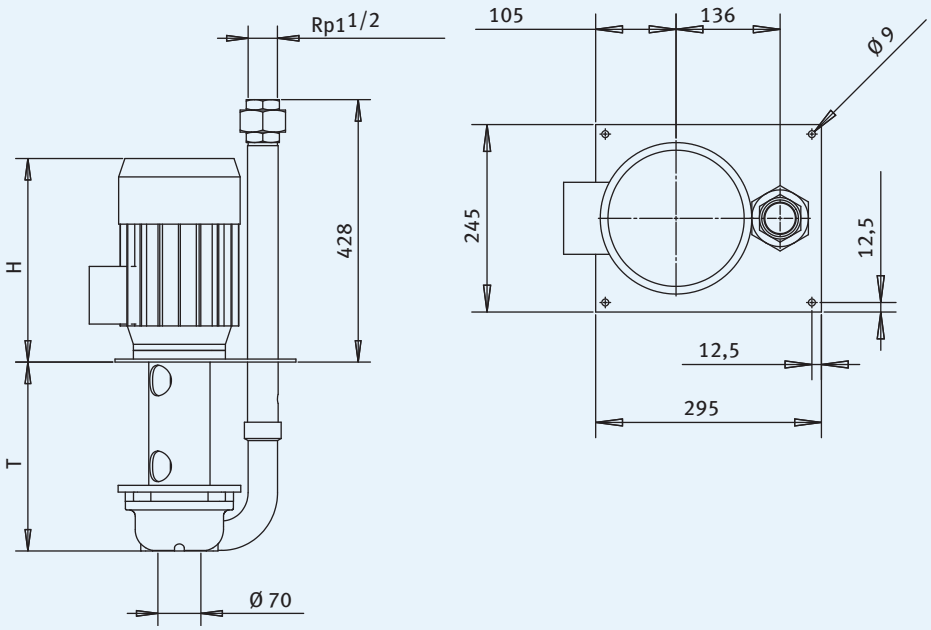

Characteristic curves for 2900 rpm, 50 Hz, 1 mm²/s

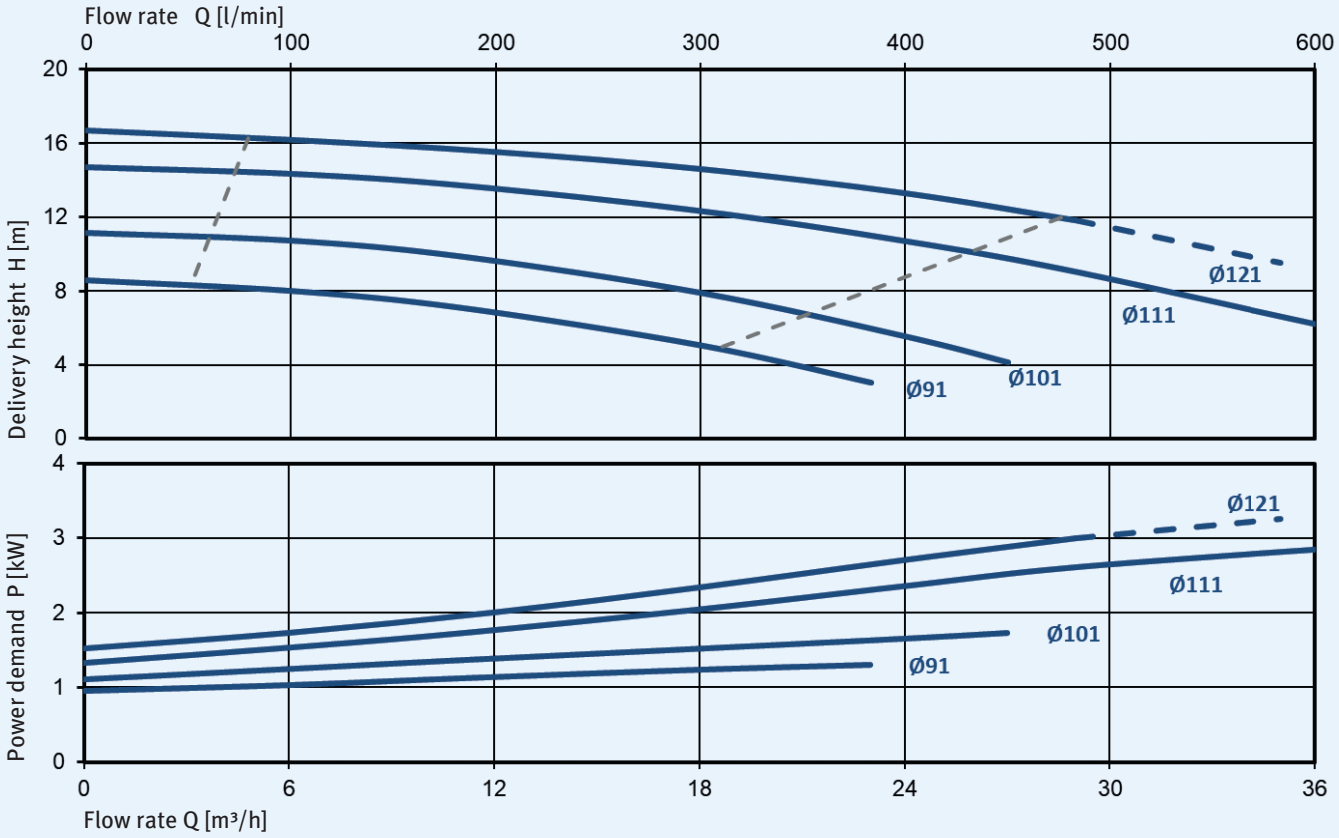

Characteristic curves for 3500 rpm, 60 Hz, 1 mm²/s

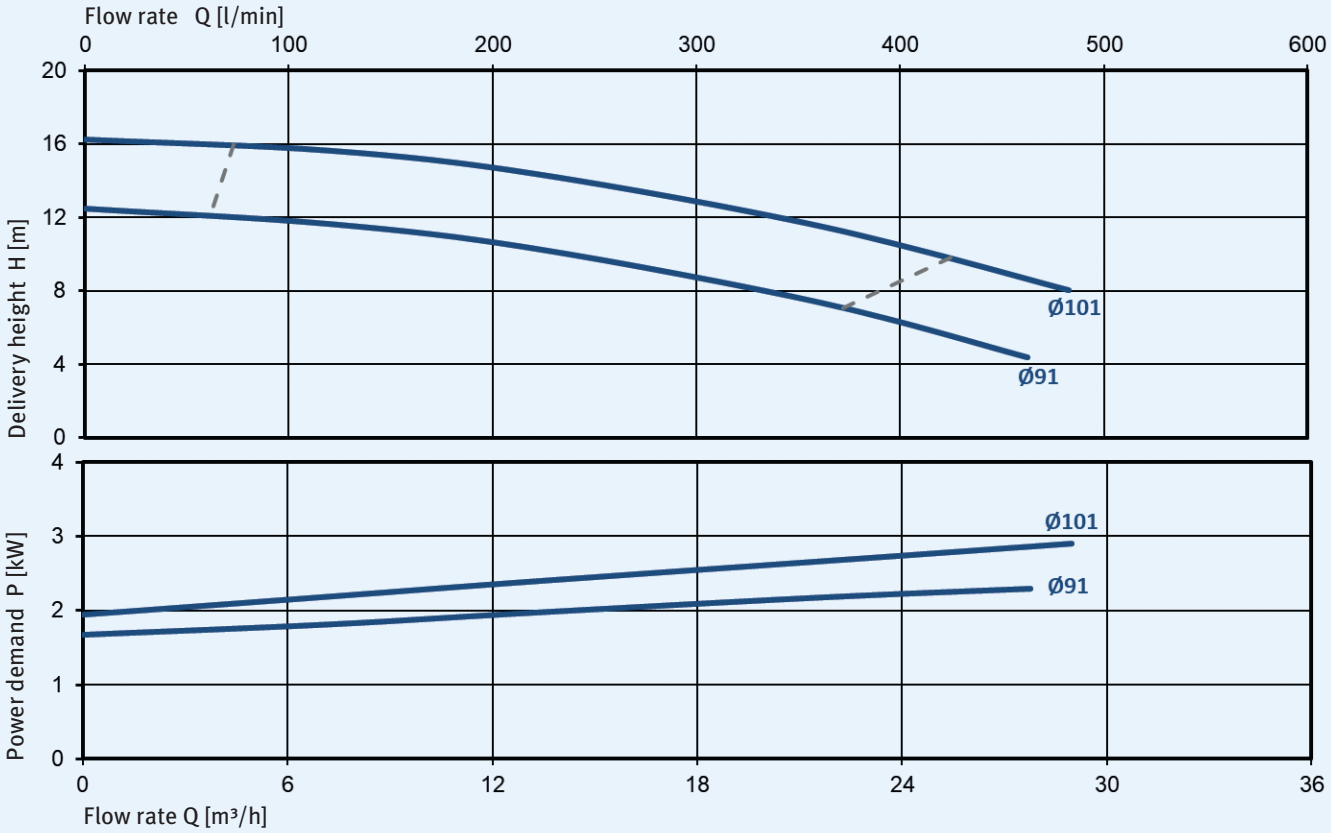

TSK 50 contaminated medium pump

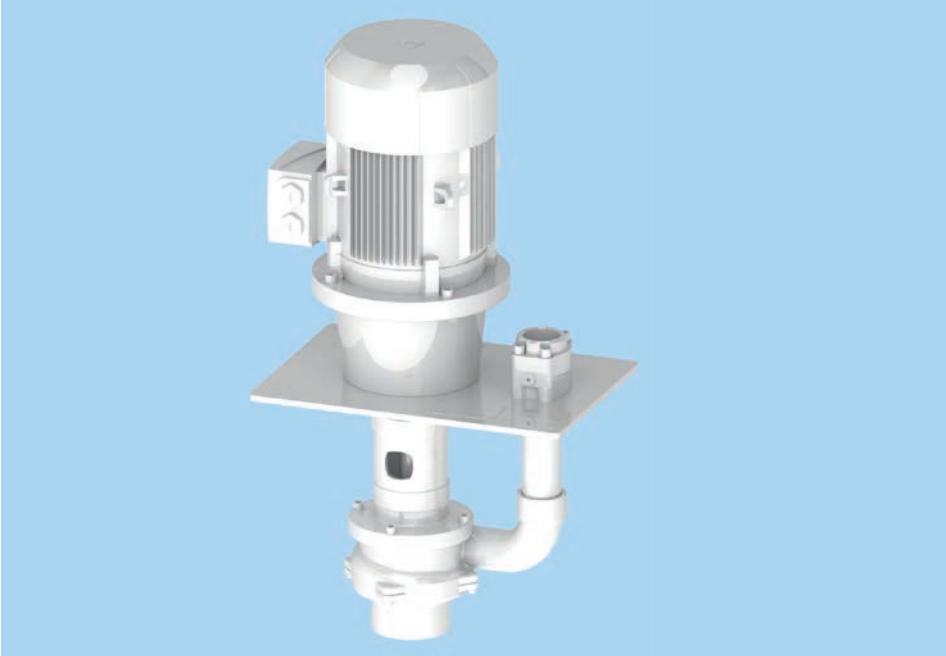

Variations

Type	D [mm]	H [mm]	Weight [kg]	Frequency [Hz]	Motor output [kW]	Sound pressure level [dB(A)]
TSK 50-.../30 385	385	515	71	50	3.0	67
TSK 50-.../30 495	495	515	76	50	3.0	67
TSK 50-.../40 385	385	499	81	50/60	4.0/3.7	69/73
TSK 50-.../40 495	495	499	86	50/60	4.0/3.7	69/73
TSK 50-.../55 385	385	550	93	50/60	5.5	68/72
TSK 50-.../55 495	495	550	98	50/60	5.5	68/72

*The following depths of immersion can be provided on request: 605 mm, 715 mm and 825 mm

Dimensions

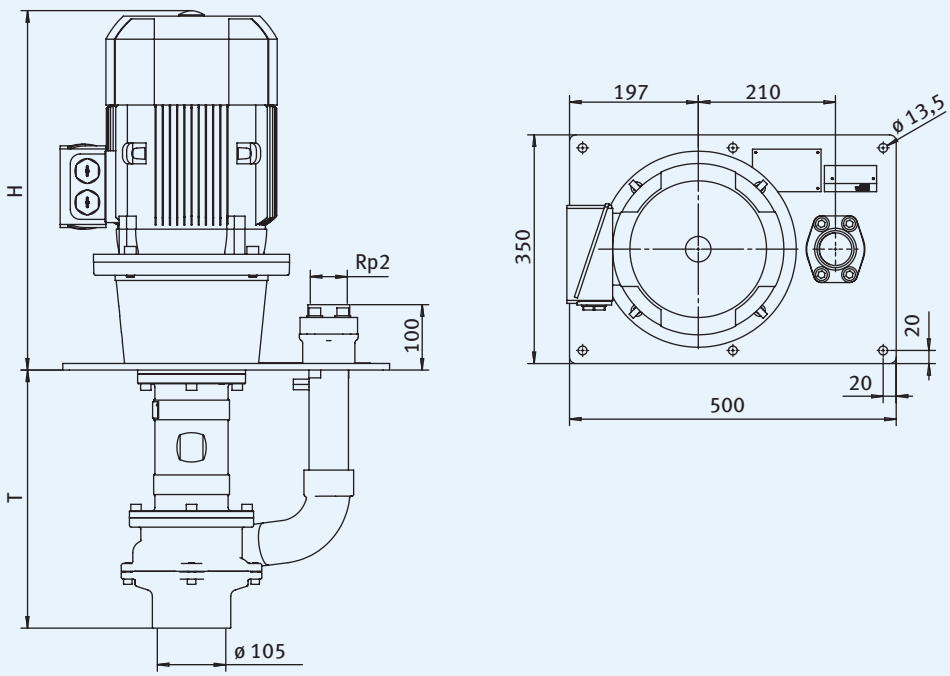

Characteristic curves for 2900 rpm, 50 Hz, 1 mm²/s

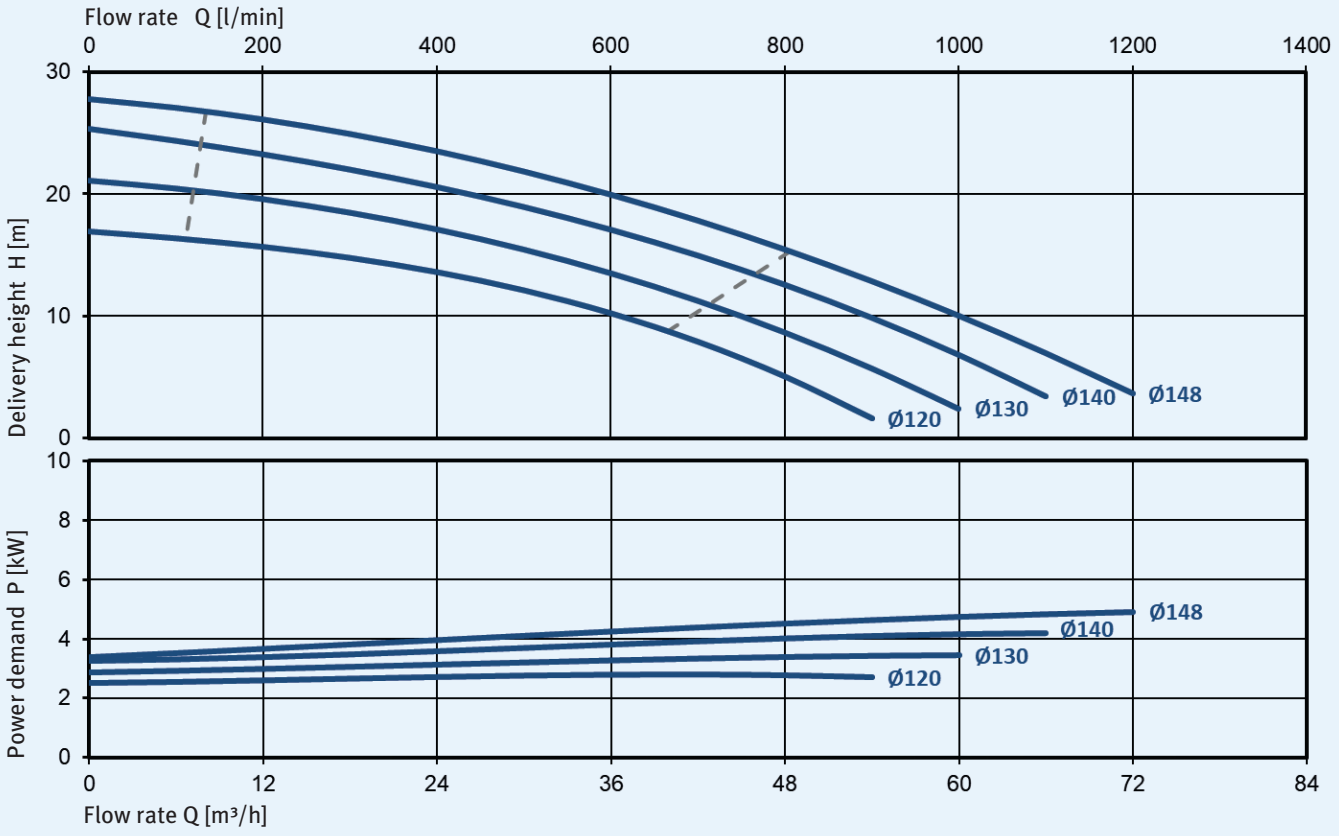

Characteristic curves for 3500 rpm, 60 Hz, 1 mm²/s

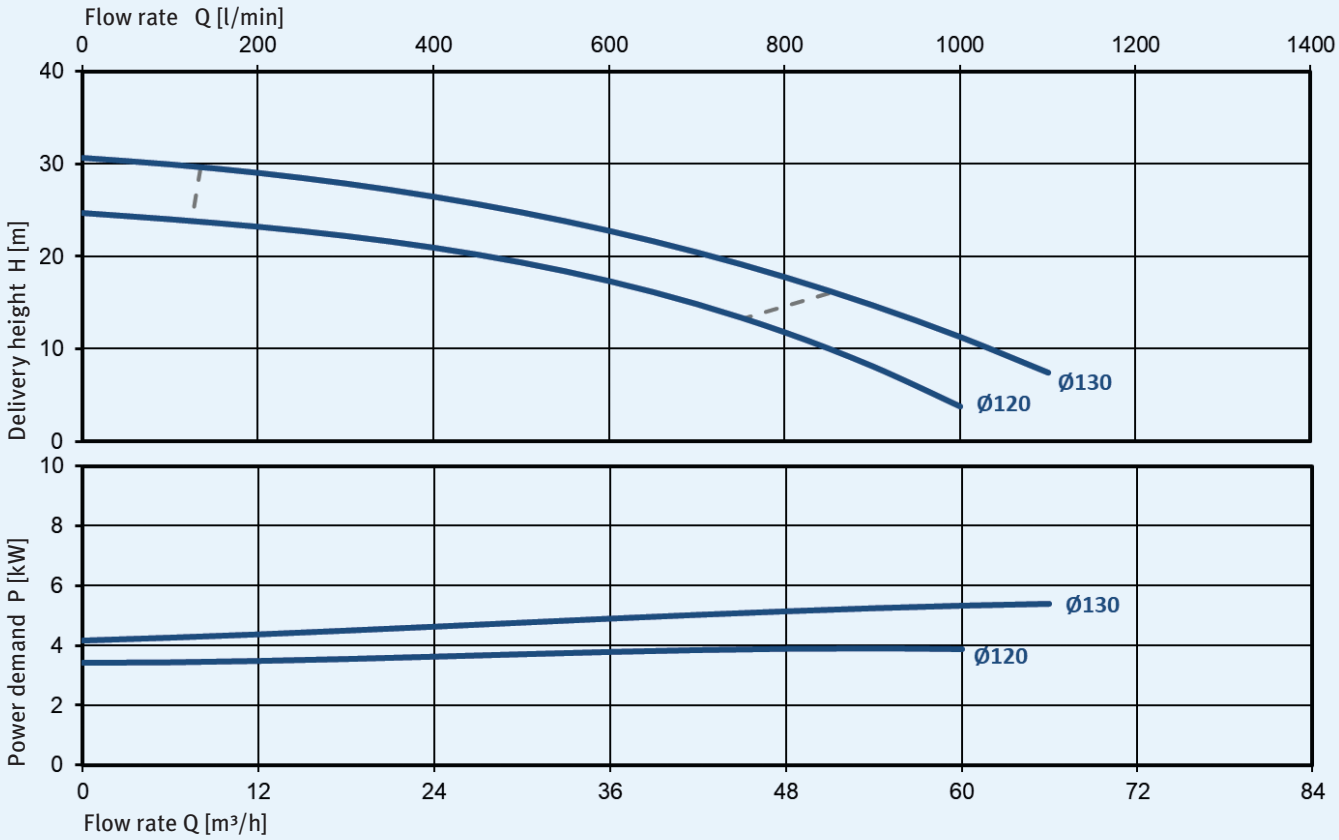

TSK 65 contaminated medium pump

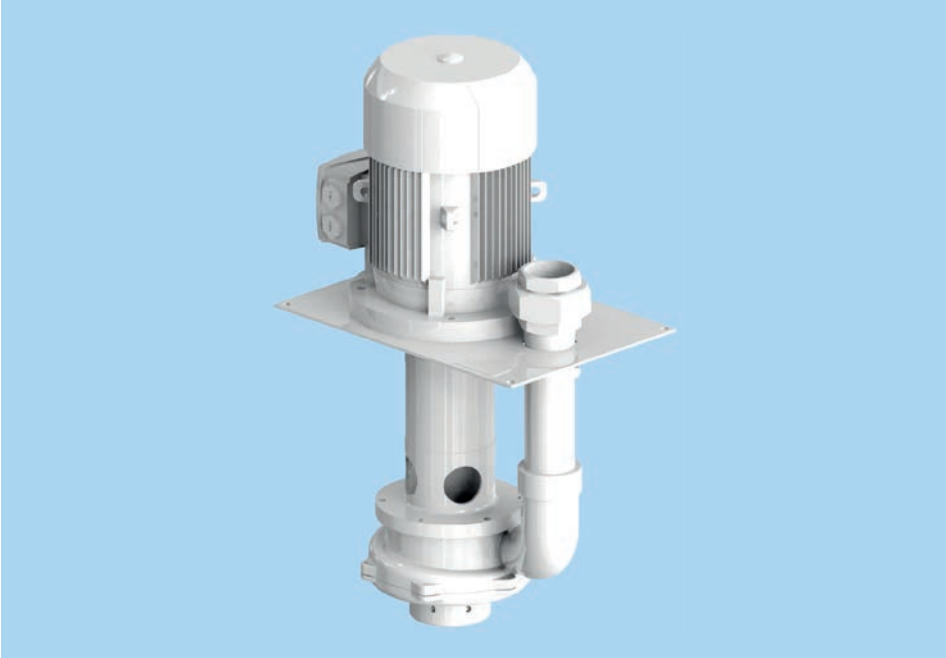

Variations

Type	D [mm]	H [mm]	Weight [kg]	Frequency [Hz]	Motor output [kW]	Sound pressure level [dB(A)]
TSK 65-.../55 482	482	410	110	50	5.5	68
TSK 65-.../75 482	482	450	120	50	7.5	68
TSK 65-.../55 842	842	410	140	50	5.5	68
TSK 65-.../75 842	842	450	150	50	7.5	68
TSK 65-.../55 482	482	410	110	60	5.5	72
TSK 65-.../75 482	482	450	120	60	7.5	72
TSK 65-.../55 842	842	410	140	60	5.5	72
TSK 65-.../75 842	842	450	150	60	7.5	72

Dimensions

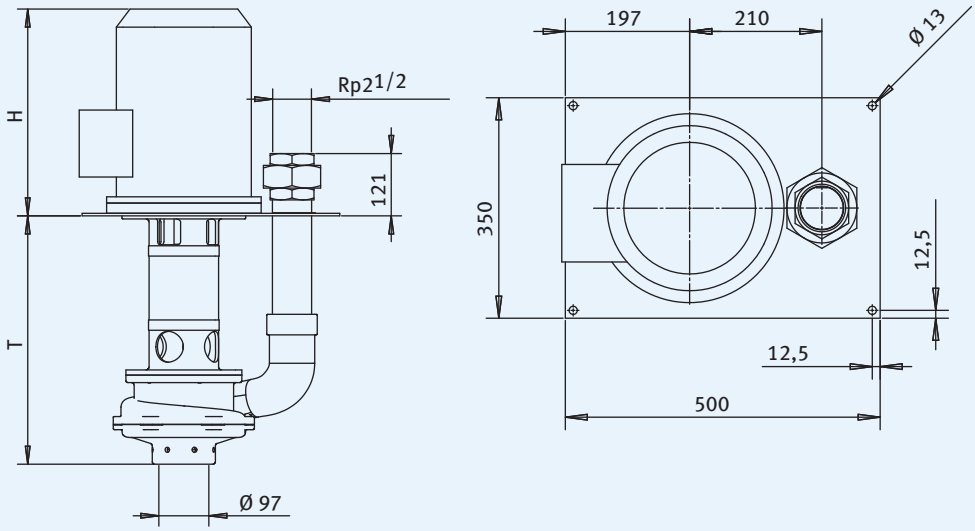

Characteristic curves for 2900 rpm, 50 Hz, 1 mm²/s

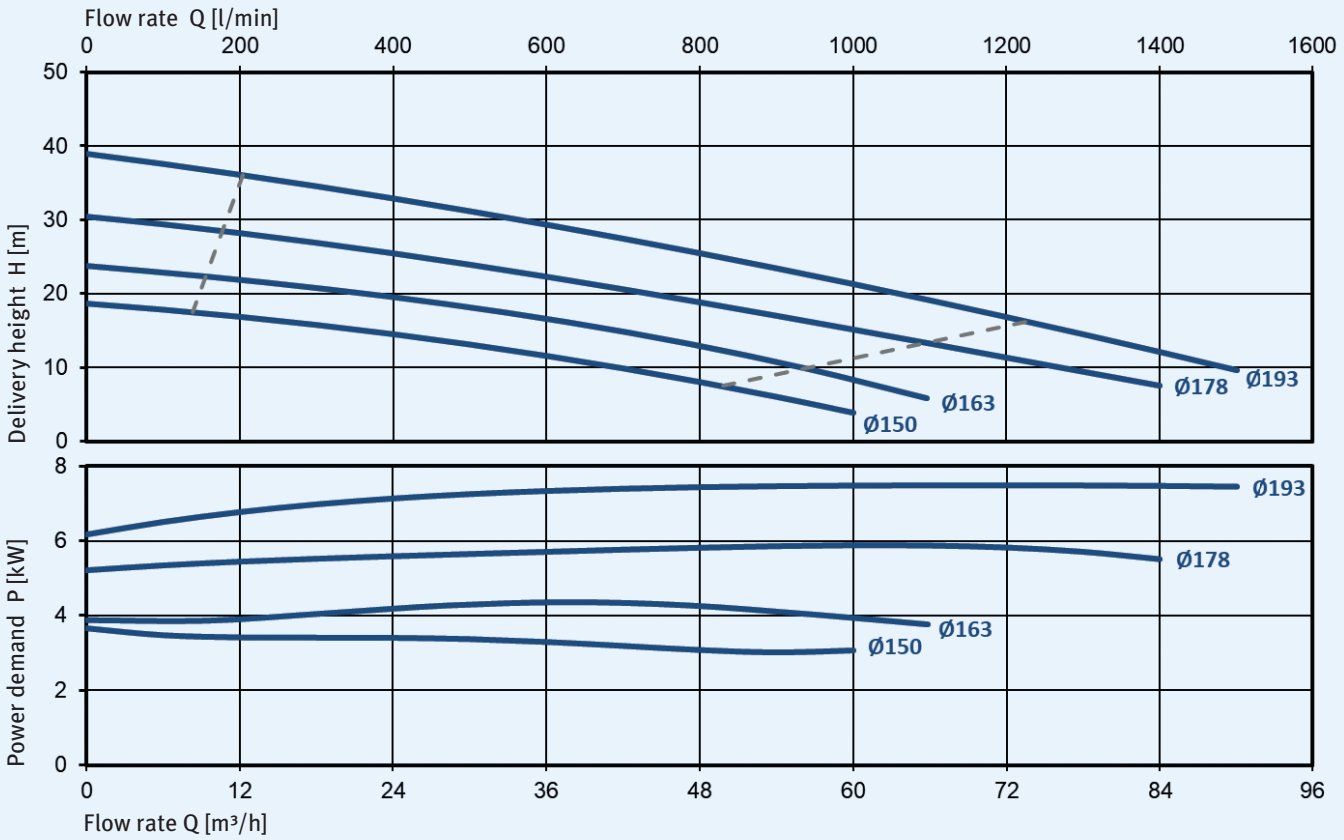

Characteristic curves for 3500 rpm, 60 Hz, 1 mm²/s

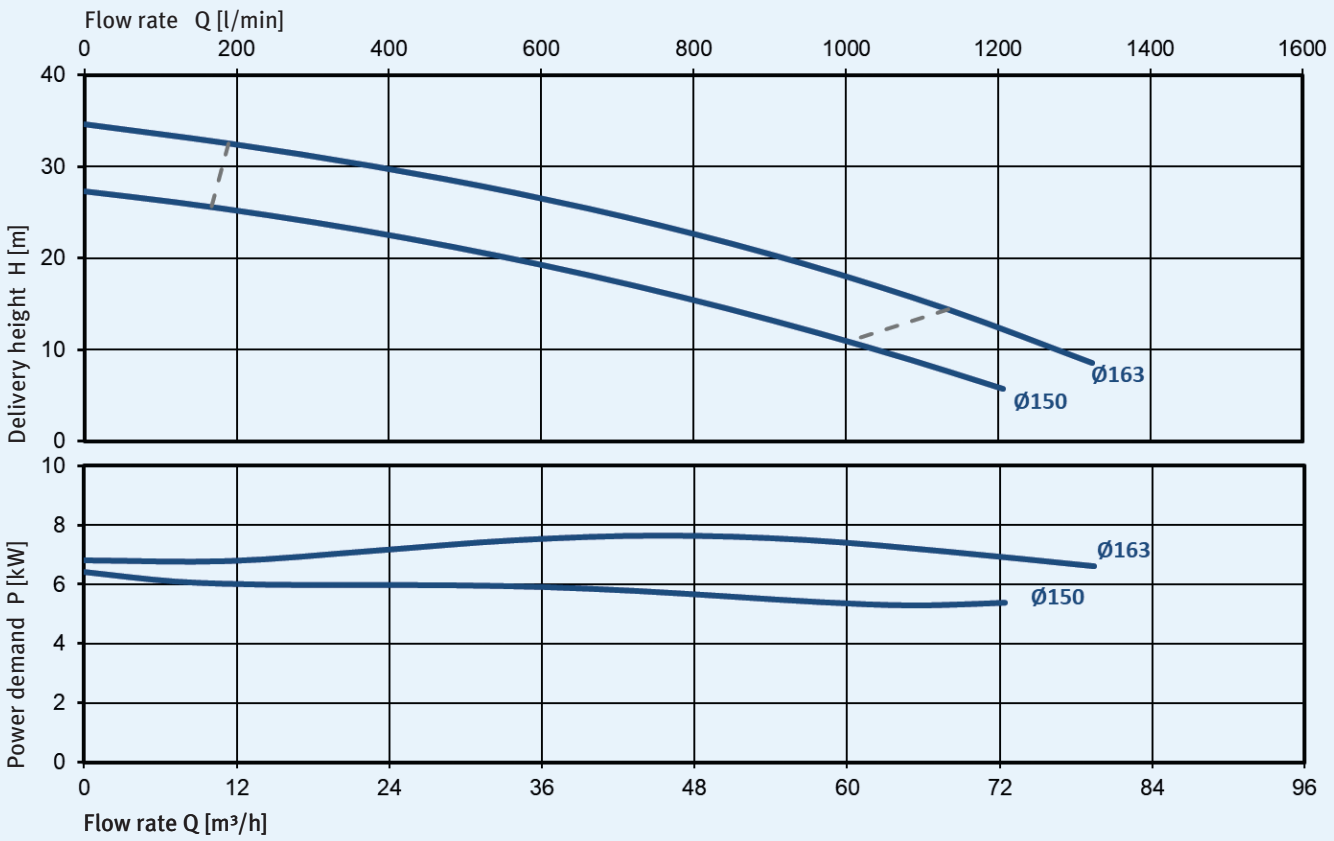

TSL 40 contaminated medium pump

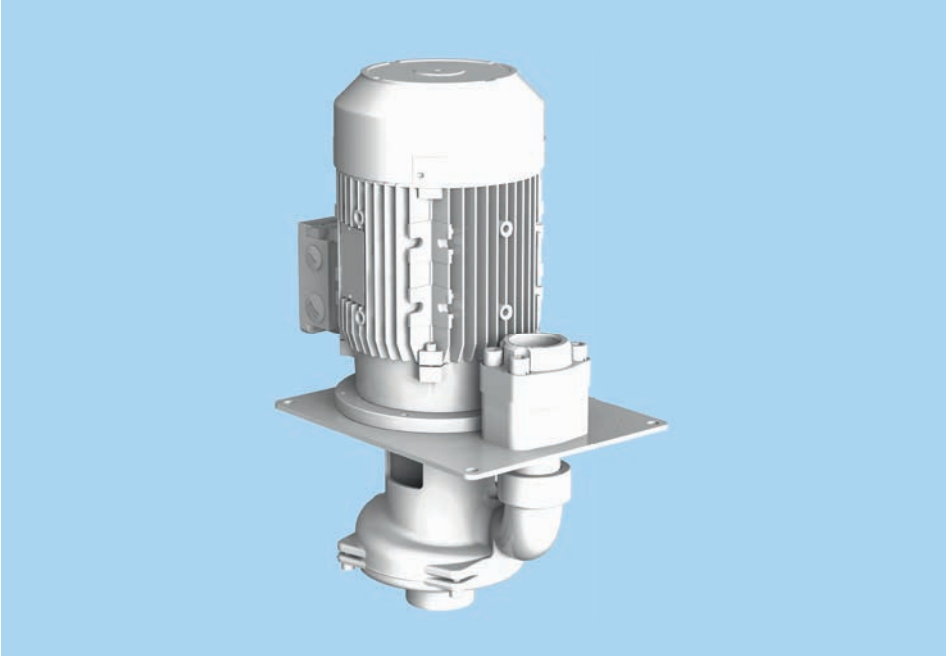

Variations

Type	D [mm]	H [mm]	Weight [kg]	Frequency [Hz]	Motor output [kW]	Sound pressure level [dB(A)]
TSL 40-05/15 195	195	286	37	50	1.5	63
TSL 40-15/15 195	195	286	37	50	1.5	63
TSL 40-25/22 195	195	286	34	50	2.2	63
TSL 40-35/22 195	195	286	34	50	2.2	63
TSL 40-05/22 195	195	286	34	50/60	2.2	63/65
TSL 40-15/30 195	195	343	39	50/60	3.0	66/69
TSL 40-25/30 195	195	343	39	50/60	3.0	66/69

*The following depths of immersion can be provided on request: 290 mm, 510 mm and 840 mm

Dimensions

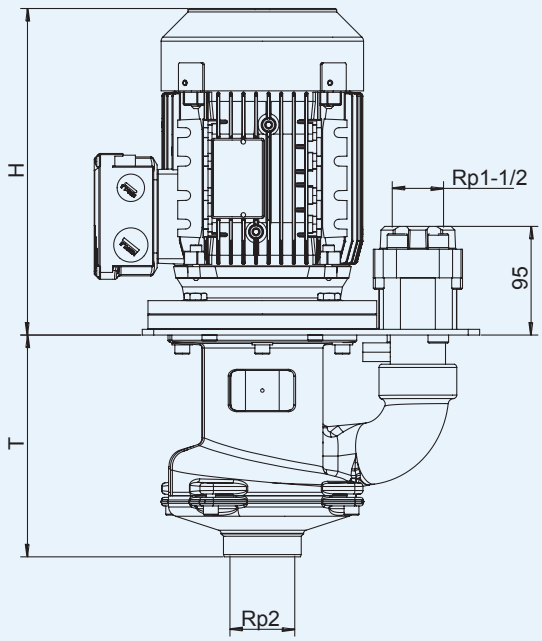

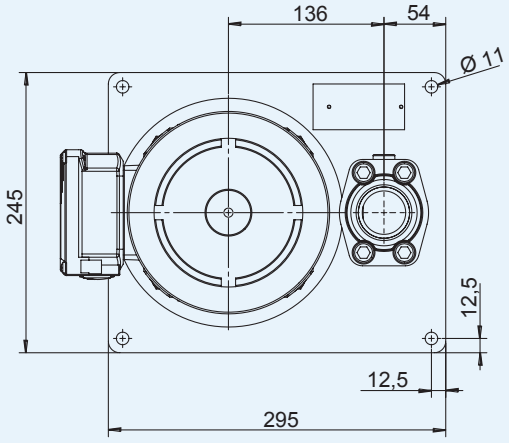

Characteristic curves for 2900 rpm, 50 Hz, 1 mm²/s

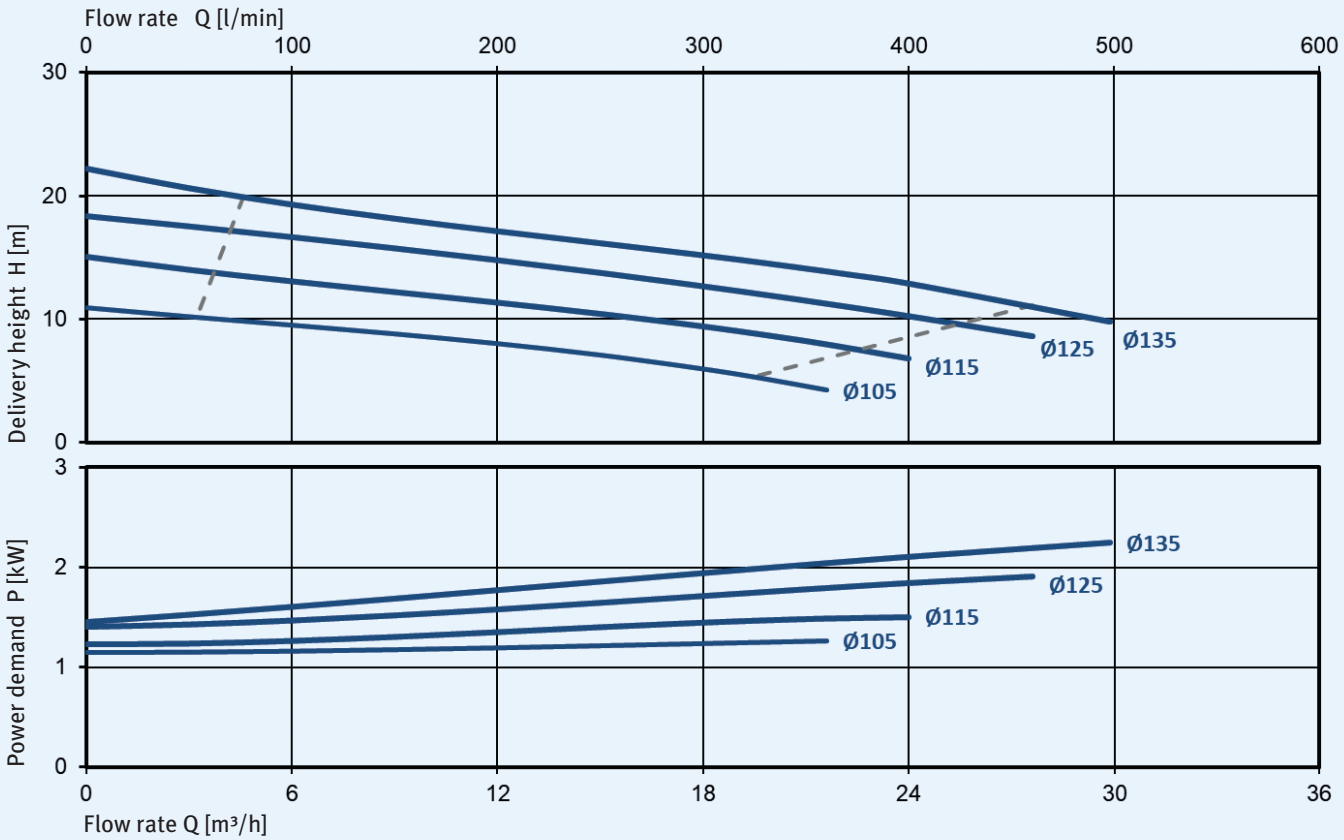

Characteristic curves for 3500 rpm, 60 Hz, 1 mm²/s

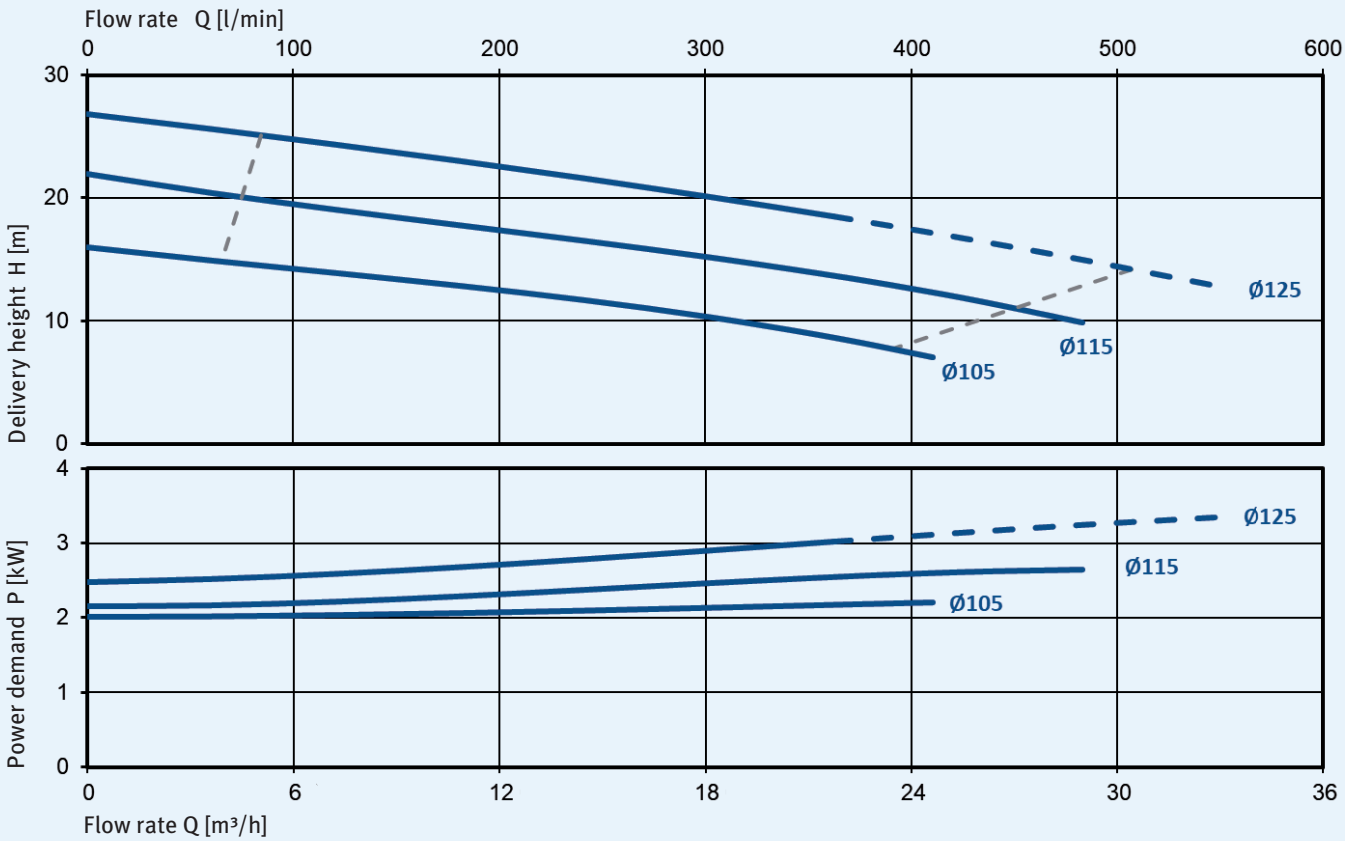

Shredder pumps

KNOLL TSC shredder pumps are cooling lubricant pumps with an integrated reducer for aluminium chips. These pumps are able to shred long aluminium chips to a size suitable for pumping, and to then transport them together with the cooling lubricant to the central treatment station. This eliminates the need for an additional chip reducer.

Properties

- Flexible design with standard-dimensioned motor
- Energy efficient in combination with a frequency inverter
- The bearing is protected by a rotary shaft seal
- Rigid shaft with the cutting head mounting in a bronze precision bearing
- Durable and low-maintenance thanks to hardened hydraulic and reducer components
- Semi-open radial impeller
- ST impeller material

Dimensions

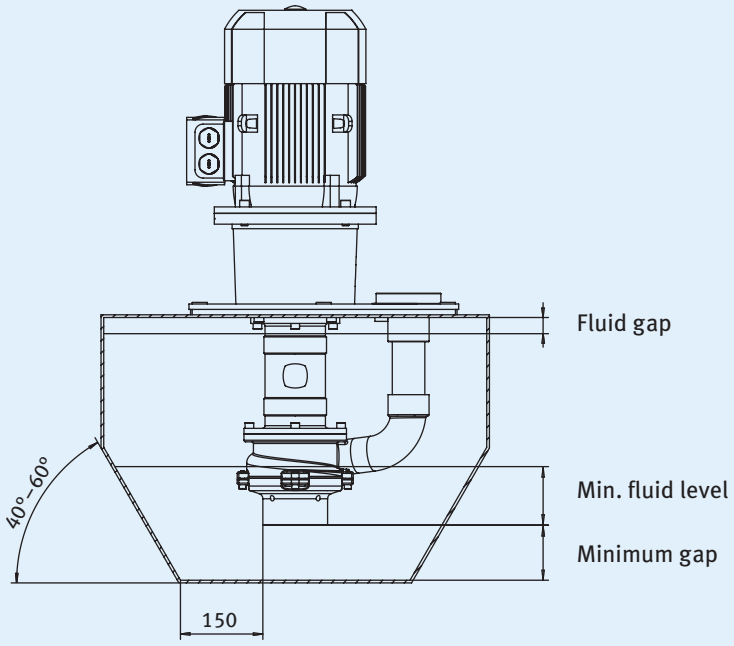

Container design

Minimum volume: 250 l
Minimum wall thickness: 5 mm

Maximum performance data

Type	Air proportion vol. [%]	Volume flow [l/min]	Delivery height [m]	Chip thickness [mm]	Chip transport [g/l]
TSC 50	25	1000	26	0.5	7
TSC 65	25	1000	20	0.5	10

Fluid level

Type	Minimum gap [mm]	Min. fluid level [mm]	Fluid gap [mm]
TSC 50	70	90	40
TSC 65	70	100	30 (170*)

* Dimension valid for TSC 65-.../... 500

Characteristic curve diagram

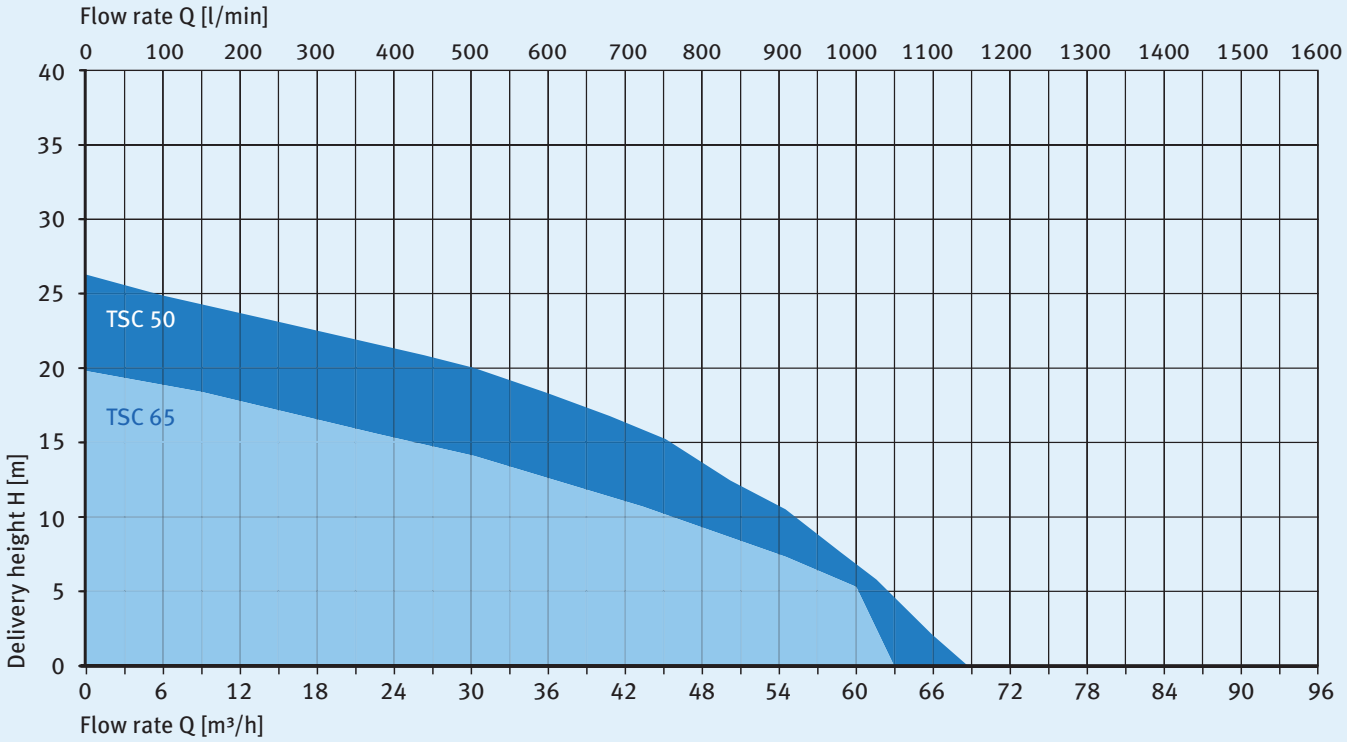

TSC 50
shredder pump

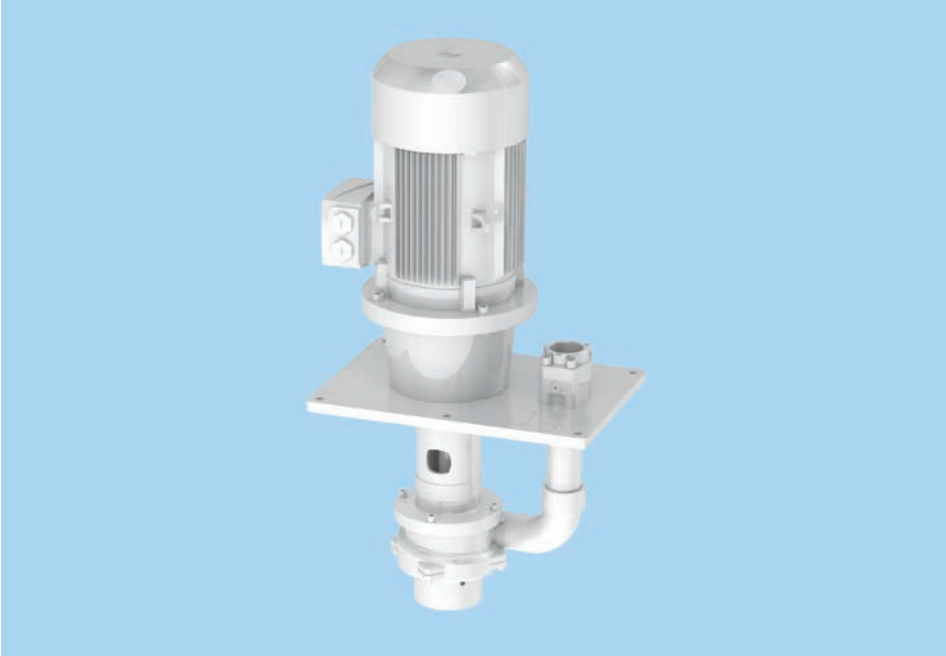

Variations

Type	D [mm]	H [mm]	Weight [kg]	Frequency [Hz]	Motor output [kW]
TSC 50-.../40 375	375	509	82	50	4.0
TSC 50-.../40 485	485	509	87	50	4.0
TSC 50-.../55 375	375	560	93	50/60	5.5
TSC 50-.../55 485	485	560	99	50/60	5.5
TSC 50-.../75 375	375	610	106	50/60	7.5
TSC 50-.../75 485	485	610	111	50/60	7.5

*The following depths of immersion can be provided on request: 595 mm, 705 mm and 815 mm

Dimensions

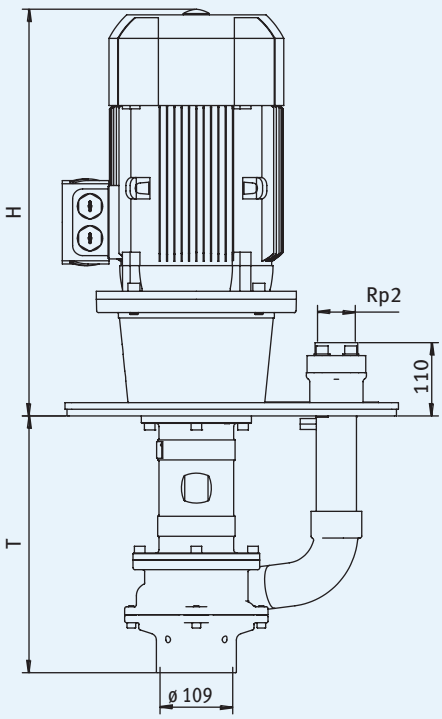

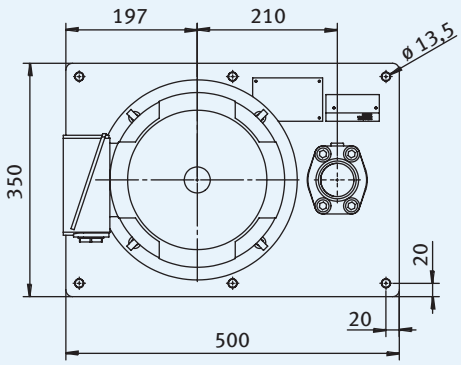

Characteristic curves for 2900 rpm, 50 Hz, 1 mm²/s

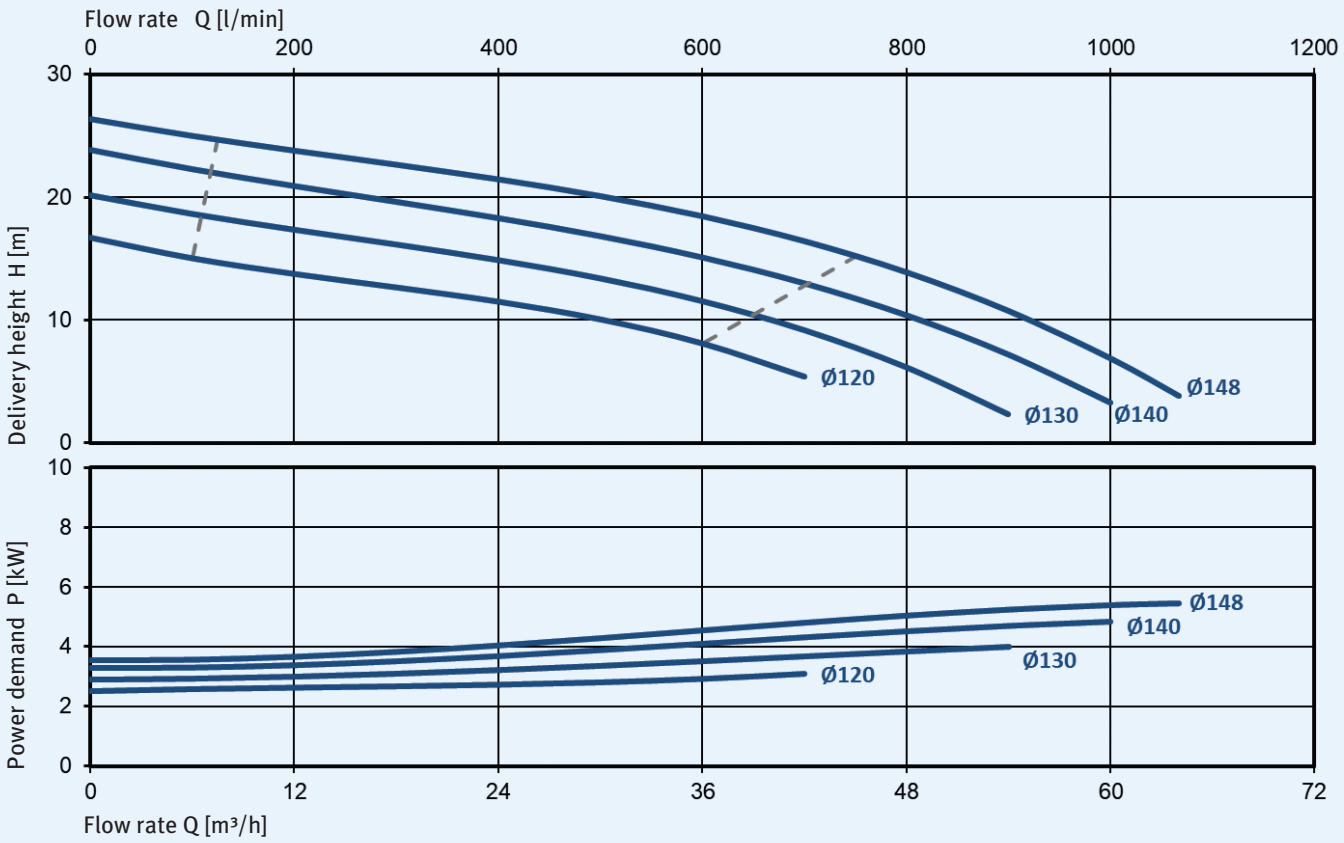

Characteristic curves for 3500 rpm, 60 Hz, 1 mm²/s

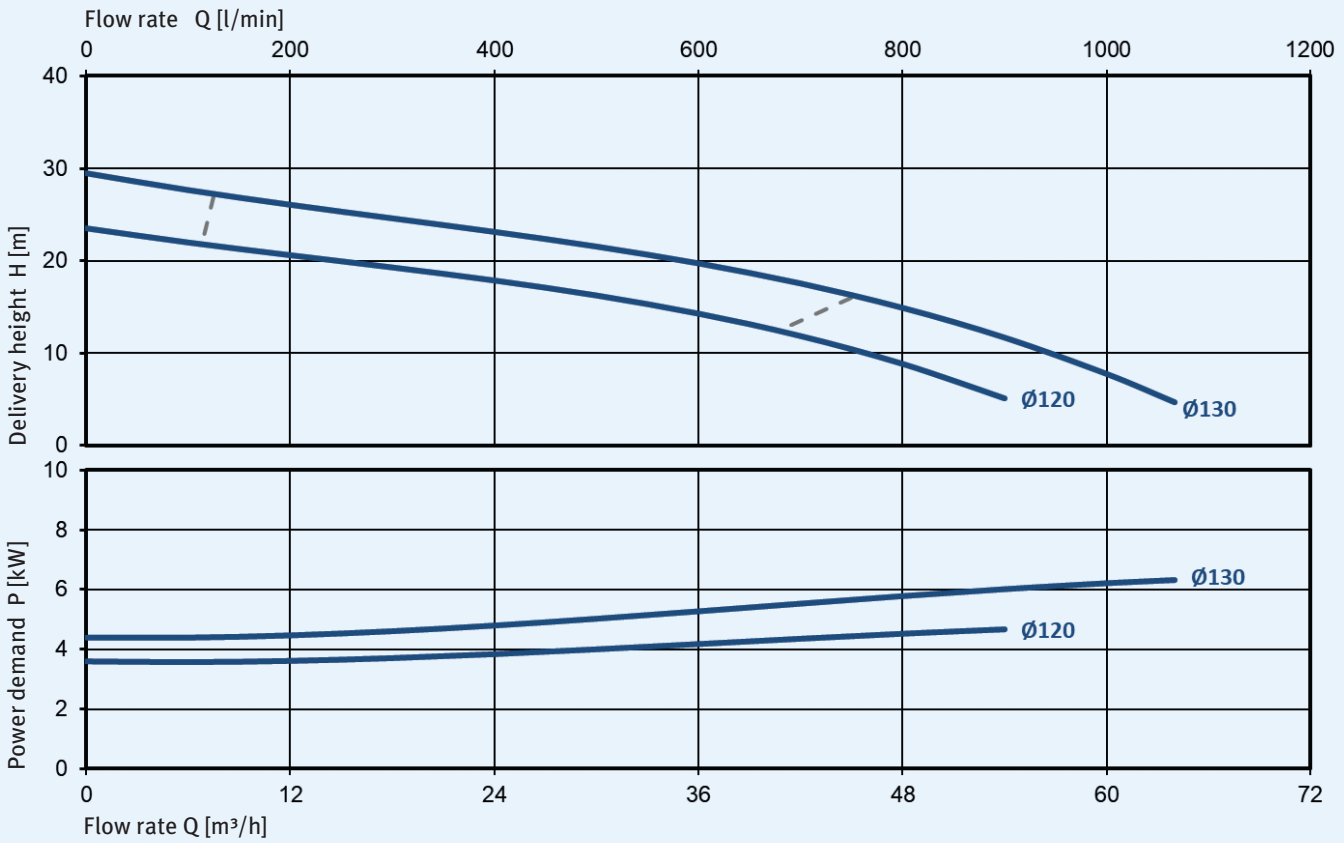

TSC 65
shredder pump

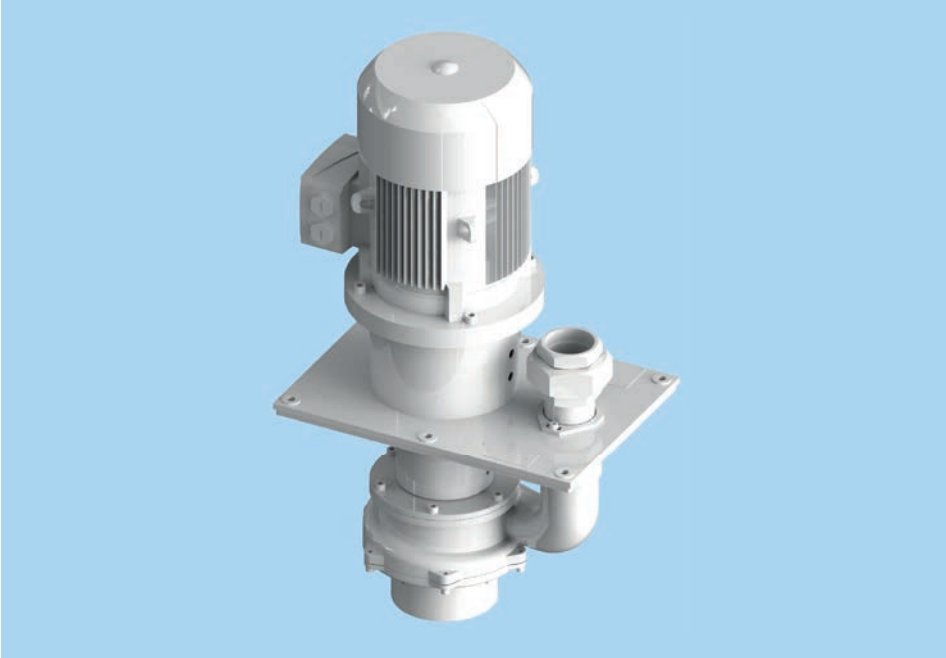

Variations

Type	T [mm]	H [mm]	Weight [kg]	Frequency [Hz]	Motor output [kW]
TSC 65-50/55 360	363	573	110	50	5.5
TSC 65-63/75 360	363	573	110	50	7.5
TSC 65-50/55 500	501	425	110	50	5.5
TSC 65-63/75 500	501	425	110	50	7.5
TSC 65-50/55 360	363	573	110	60	9.2
TSC 65-50/55 500	501	425	110	60	9.2

Dimensions

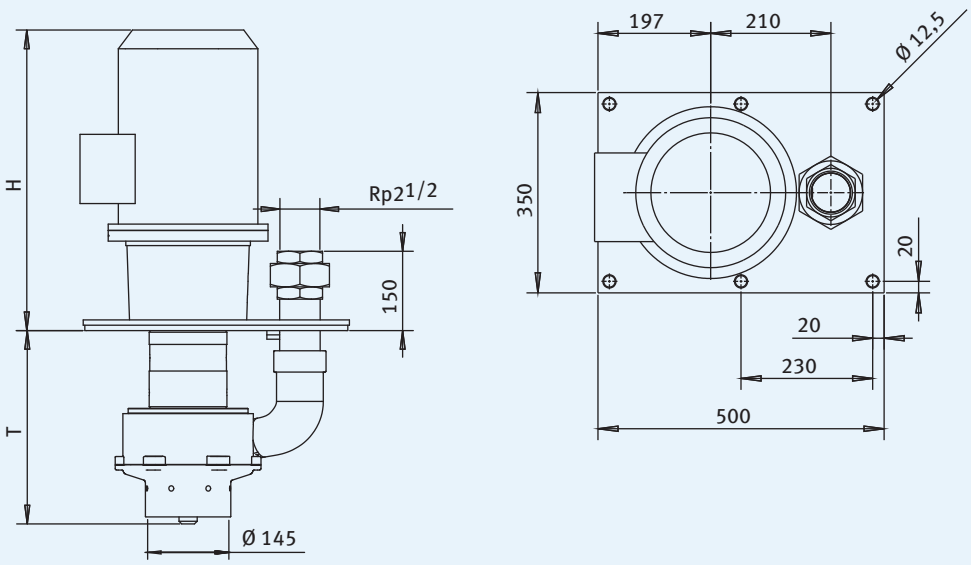

Characteristic curves for 2900 rpm, 50 Hz, 1 mm²/s

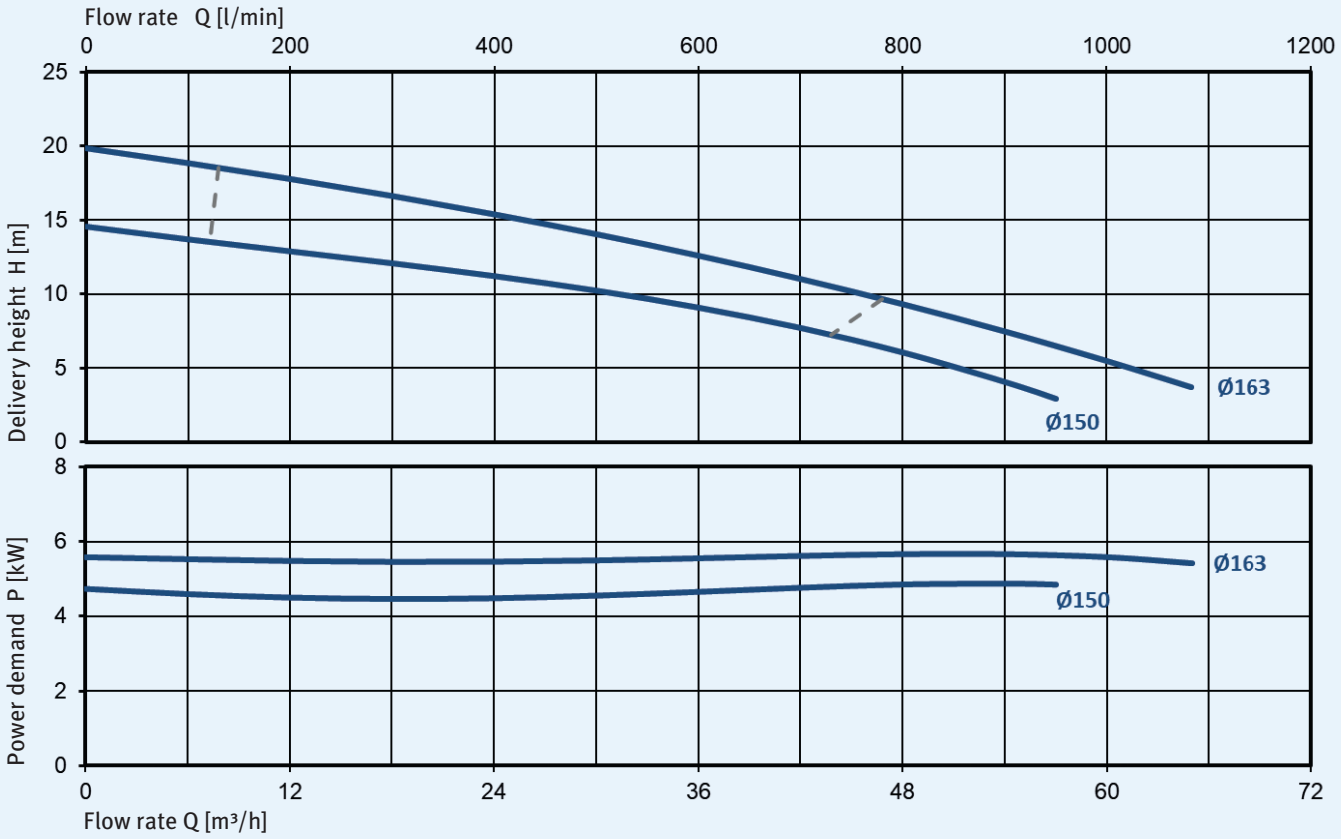

Characteristic curves for 3500 rpm, 60 Hz, 1 mm²/s

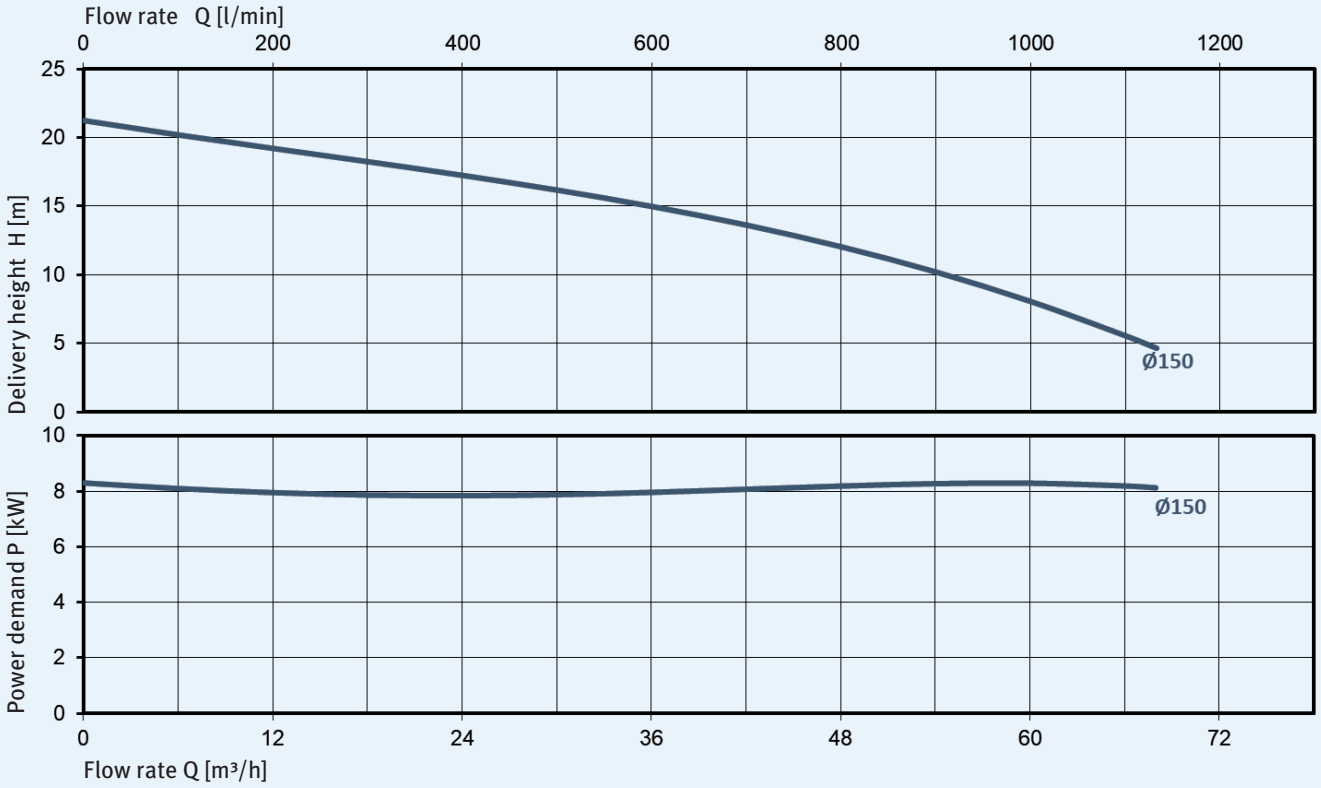

KNOLL Maschinenbau GmbH
Schwarzachstraße 20
D-88348 Bad Saulgau
Tel. +49 7581 2008-0
Fax +49 7581 2008-90140
info.itworks@knoll-mb.de
www.knoll-mb.com

Technical specifications are subject to change without notice

508954